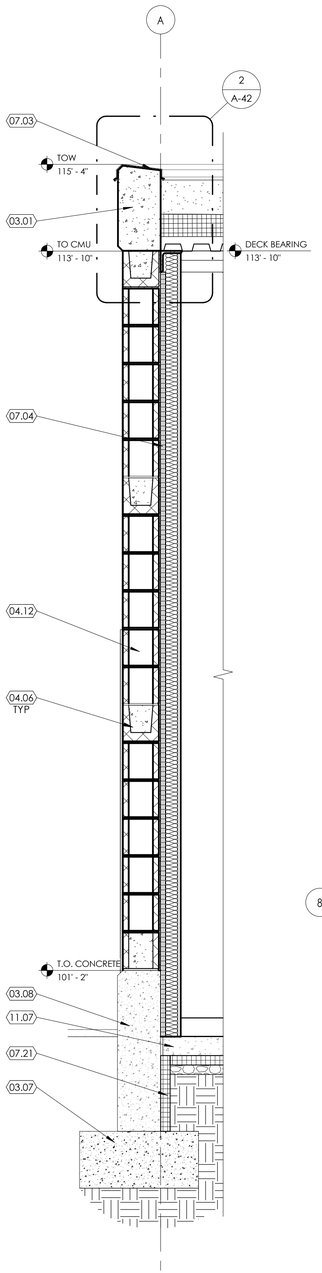

1 Wall Section
SCALE: 3/4" = 1'-0"

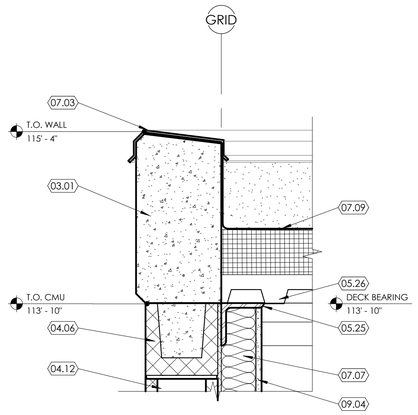

2 Parapet Detail
SCALE: 1 1/2" = 1'-0"

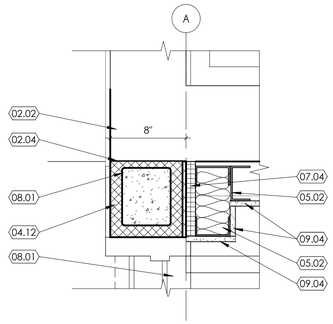

3 Wall Detail
SCALE: 1 1/2" = 1'-0"

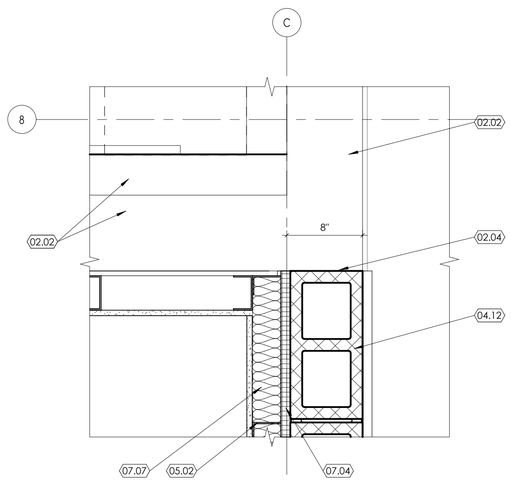

4 Wall Detail
SCALE: 1 1/2" = 1'-0"

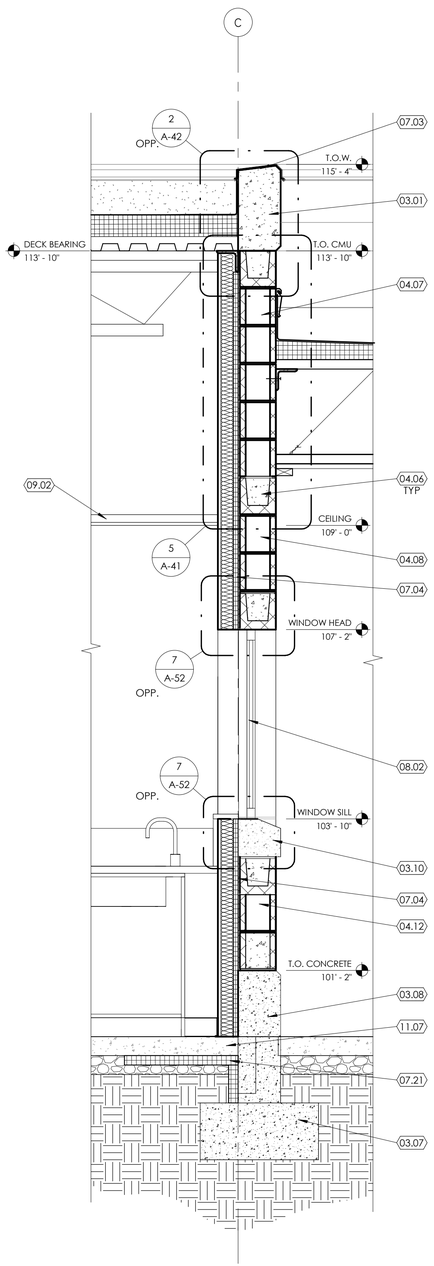

5 Wall Section
SCALE: 3/4" = 1'-0"

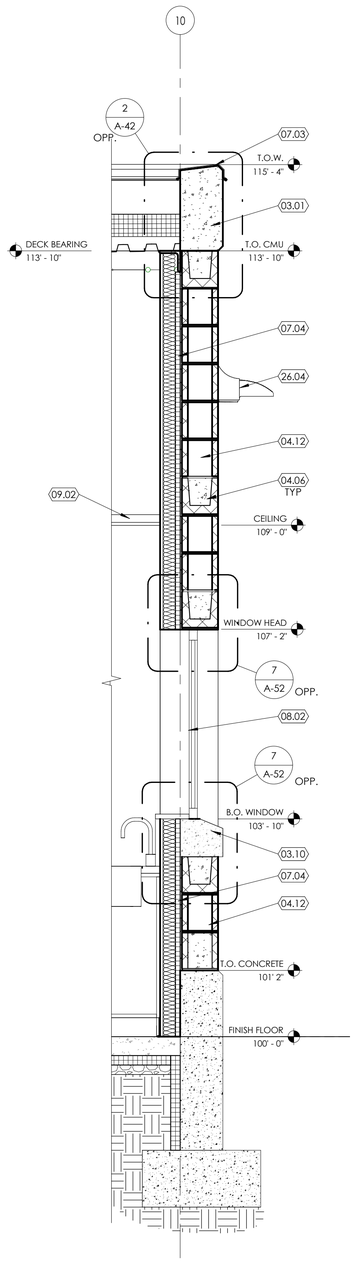

6 Wall Section
SCALE: 3/4" = 1'-0"

KEYED NOTES

02.02 EXISTING WALL TO REMAIN.
02.04 CONTRACTOR TO SAW-CUT END OF EXIST. SPLIT-FACED CMU - 8" DEEP MIN. (THICKNESS OF NEW CMU WALL) AS REQUIRED TO PROVIDE A BETTER GROUT JOINT FOR NEW WALL TO EXIST. WALL CONNECTION. COORD. W/ ARCHITECT PRIOR TO CUTTING.
03.01 CONCRETE PARAPET WALL CAP TO MATCH EXISTING. ATTACH PER STRUCTURAL DRAWINGS.
03.07 CONCRETE FOOTING. SEE STRUCTURAL DRAWINGS.
03.08 CONCRETE FOUNDATION WALL WITH PARGE COAT FINISH. SEE STRUCTURAL DRAWINGS.
03.10 EXTERIOR PRECAST CONCRETE WINDOW SILL.
04.06 HORIZONTAL MASONRY BOND BEAM. SEE STRUCTURAL DRAWINGS.
04.07 SMOOTH CMU FACE CMU AT CANOPY ONLY
04.08 SPLIT FACE CMU.
04.12 CMU WALL. SEE STRUCTURAL DRAWINGS.
05.02 METAL STUD FRAMING. SEE FLOOR PLANS FOR WALL TYPES.
05.25 STEEL ANGLE. SEE STRUCTURAL DRAWINGS.
05.26 STEEL ROOF DECK. SEE STRUCTURAL DRAWINGS.
07.03 PARAPET CAP (COLOR TO MATCH EXISTING) HELD IN PLACE WITH CONTINUOUS CLEAT NAILED TO WOOD NAILER. SLOPE CAP TO DRAIN TO ROOF SIDE. ATTACH PARAPET CAP ON ROOF SIDE TO NAILER WITH GASKETED FASTENERS.
07.04 RIGID INSULATION BOARD, 1" THICK.
07.07 BATT INSULATION (AT BUILDING EXTERIOR WALLS AND ROOF CURBS USE R-13 VALUE INSULATION BETWEEN 3-5/8" STUDS AND R-19 BETWEEN 6" STUDS. AT BUILDING INTERIOR WALLS, SOFFIT, ETC. USE SOUND BATT INSULATION).
07.09 ROOFING MEMBRANE. SINGLE-PLY MEMBRANE, ATTACH INSULATION MECHANICALLY OVER ROOF DECK. PROVIDE VAPOR BARRIER BETWEEN DECK AND INSULATION.
07.21 15 MIL VAPOR RETARDER OVER COMPACTED GRAVEL (BELOW SLAB).
08.01 NEW DOOR FRAME AND DOOR. SEE DOOR SCHEDULE FOR DOOR SIZE, DOOR ELEVATION, ETC.
08.02 NEW WINDOW. SEE WINDOW TYPES FOR SIZE. SEE FLOOR PLAN FOR SILL TYPE.
09.02 CEILING. SEE REFLECTED CEILING PLANS FOR CEILING TYPE AND HEIGHT.
09.04 GYPSUM BOARD, 5/8" THICK, ATTACHED TO METAL STUD FRAMING. USE FIRE RATED (TYPE 'X') GYPSUM BOARD, IF WALLS OR CEILINGS ARE FIRE RATED AND USE CEMENTITIOUS BOARD IF CERAMIC OR PORCELAIN WALL TILES ARE INDICATED IN THE FINISH SCHEDULE AS WALL FINISH. PROVIDE CONTROL JOINT AS PER DETAIL 14/A502A WHEN LENGTH OF GYPSUM BOARD EXCEEDS 50' IN ONE DIRECTION. COORDINATE WITH ARCHITECT FOR JOINT LOCATIONS.
11.07 HYDRAULIC LIFT - COORDINATE REQUIREMENTS W/ OWNER. O.F.O.I.
26.04 NEW EXTERIOR LIGHT. SEE ELECTRICAL DRAWINGS.

KEYED NOTES

A. SEE SHEETS A-02 AND A-04 FOR SYMBOLS, GENERAL NOTES AND LEGEND.
B. SEE SHEET A-53 FOR FINISH SCHEDULE.
C. SEE SHEET A-51 FOR DOOR SCHEDULE.
D. SEE SHEET A-52 FOR WINDOW SCHEDULE.
E. ALL EXISTING WALLS TO REMAIN ARE TO BE PATCHED AND REPAIRED AND MADE READY TO RECEIVE NEW FINISHES.

BOWEN COLLINS & ASSOCIATES
NJRA ARCHITECTS
5272 S. College Drive, Suite 104
Murray, Utah 84123

STATE OF UTAH
SELVAM RAJAVELU
267857-0301
LICENSED ARCHITECT

NO.	DATE	REV. BY	DESCRIPTION
			REVISIONS

South Valley Water Reclamation Facility
Lab Expansion and Remodel
7495 South 1300 West
West Jordan, Utah 84084

VERIFY SCALE
BAR IS ONE INCH
ORIGINAL DRAWING

DESIGN
DESIGN
DRAWN
REVIEW
CHECKED
APPROVED

Wall Sections

PROJECT NUMBER 17906.00
DATE October 25, 2018

DRAWING NO. A-42
SHEET 22 OF 79

10/30/2018 1:45:13 PM

DOOR SCHEDULE

DOOR #	DOOR						FRAME			DETAILS			FIRE RATING (MINUTES)	HARDWARE GROUP	COMMENTS
	# OF PANELS	WIDTH W1	SIZE HEIGHT	SIZE THICKNESS	MATERIAL	TYPE	TYPE	DEPTH	MATERIAL	HEAD	JAMB	THRESHOLD			
101A	1	3' - 0"	7' - 0"	1 3/4"	WD	A		6"	EXIST	1/GA-08	5/GA-08	5/GA-09	20 MIN	5	PROVIDE NEW CARD READER
102A	1	3' - 0"	7' - 0"	1 3/4"	WD	B	1(2/A-51)	6"	HM	1/GA-08	2/GA-08			3	
102B	1	3' - 0"	7' - 0"	1 3/4"	WD	B	1(2/A-51)	6"	HM	1/GA-08	5/GA-08			3	
103A	1	3' - 0"	7' - 0"	1 3/4"	HM	A		10"	EXIST					1	
104A	1	3' - 0"	7' - 0"	1 3/4"	HM	B		10"	EXIST			9/GA-08		4	PROVIDE NEW CARD READER
105A	1	3' - 0"	7' - 0"	1 3/4"	WD	B	1(2/A-51)	6"	HM	1/GA-08	5/GA-08			3	
106A	1	3' - 0"	7' - 0"	1 3/4"	WD	B	1(2/A-51)	6"	HM	1/GA-08	5/GA-08			3	
107A	1	3' - 0"	7' - 0"	1 3/4"	WD	A	1(2/A-51)	6"	HM	1/GA-08	5/GA-08	5/GA-09		2	PROVIDE NEW CARD READER
109A	1	3' - 0"	7' - 0"	1 3/4"	WD	B		9"	EXIST			5/GA-09	20 MIN	5	PROVIDE NEW CARD READER
109B	1	3' - 0"	7' - 0"	1 3/4"	HM	B		10"	EXIST			9/GA-08		4	PROVIDE NEW CARD READER
110A	1	3' - 0"	7' - 0"	1 3/4"	HM	C		10"	EXIST					1	
111A	1	3' - 0"	7' - 0"	1 3/4"	WD	A	1(2/A-51)	9"	HM	6/GA-08	3/GA-08	9/GA-08		1	
112A	1	3' - 0"	7' - 0"	1 3/4"	WD	B	1(2/A-51)	6"	HM	1/GA-08	5/GA-08			2	
114A	1	3' - 0"	7' - 0"	1 3/4"	WD	B	1(2/A-51)	6"	HM	1/GA-08	5/GA-08			3	
115A	1	3' - 0"	7' - 0"	1 3/4"	WD	B	1(2/A-51)	6"	HM	1/GA-08	5/GA-08			3	
116A	1	3' - 0"	7' - 0"	1 3/4"	WD	B	1(2/A-51)	6"	HM	1/GA-08	5/GA-08			3	
117A	1	3' - 0"	7' - 0"	1 3/4"	WD	A	1(2/A-51)	9"	HM	6/GA-08	2/GA-08			2	PROVIDE NEW CARD READER
118A	1	3' - 0"	7' - 0"	1 3/4"	WD	A	1(2/A-51)	5 7/8"	HM						TEMPORARY DUST PARTITION DOOR. PROVIDE HARDWARE AS REQUIRED.

GENERAL NOTES

A. SEE PROJECT MANUAL FOR DOOR HARDWARE SCHEDULE.

B. SUB-CONTRACTOR UNDER SECTION 'DOOR HARDWARE', SHALL PROVIDE ALL THE DOOR HARDWARE FOR ALL THE WOOD AND HOLLOW METAL DOORS. SEE DOOR SCHEULE FOR WOOD AND HOLLOW METAL DOORS AND THE REQUIRED HARDWARE.

C. ALL EXTERIOR DOORS SHALL BE INSULATED.

D. FIELD VERIFY WINDOW AND DOOR FRAME OPENING SIZES BEFORE FRAME INSTALLATION. OVERALL DIMENSIONS INDICATED FOR EACH FRAME TYPE ARE ROUGH OPENING SIZES IN WALLS. CONTRACTOR SHALL ADJUST INNER DIMENSIONS AS REQUIRED TO MAKE DOORS AND WINDOWS WORK.

E. ELECTRICAL DEVICES SUCH AS MAG. LOCKS, CARD READERS AND ALARM SYSTEMS BEING PART OF THE DOOR FUNCTION ARE INCLUDED AS PART OF THE ELECTRICAL PLANS AND THE HARDWARE GROUPS. GENERAL CONTRACTOR IS RESPONSIBLE TO COORDINATE LOCATIONS OF CARD READERS ETC. SHOWN ON ARCHITECTURAL AND ELECTRICAL DRAWINGS WITH ALL TRADES INVOLVED.

F. COORDINATE DOORS & GATES OUTSIDE BUILDING WITH SITE PLAN.

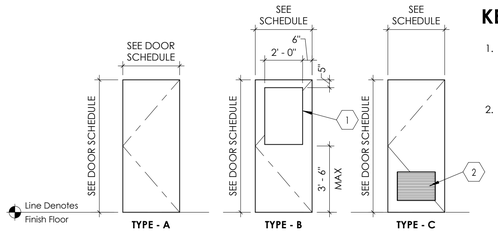

NOTE: REFER TO PLANS AND SCHEDULE FOR DOOR TYPES USED IN THE PROJECT. SOME DOOR TYPES MAY NOT BE IN PROJECT.

KEYED NOTES

1. GLAZING IN VISION PANELS AT DOORS SHALL BE 1/4" THICK, CLEAR TEMPERED GLAZING. PROVIDE WOOD FRAME FLUSH WITH THE FACE OF THE DOOR, AROUND OPENING. STAIN AND SPECIES SHALL MATCH WOOD DOOR. DOOR TO BE FACTORY GLAZED.
2. FILTERED LOUVER. COORDINATE WITH MECHANICAL FOR SIZE REQUIRED.

1 Door Types
SCALE: 1/4" = 1'-0"

NOTE: REFER TO PLANS AND SCHEDULE FOR FRAME TYPES USED IN THE PROJECT. SOME FRAME TYPES MAY NOT BE USED IN PROJECT.

KEYED NOTES

1. DOOR FRAME, SEE DOOR SCHEDULE.

2 Frame Types
SCALE: 1/4" = 1'-0"

(Note: See floor plans for locations of frame types used in this project.)

BOWEN COLLINS & ASSOCIATES
NJRA ARCHITECTS
5272 S. College Drive, Suite104
Murray, Utah 84123

STATE OF UTAH
SELVAM RAJAVELU
267857-0301
LICENSED ARCHITECT

NO.	DATE	REV. BY	DESCRIPTION
			REVISIONS

VERIFY SCALE
BAR IS ONE INCH
ORIGINAL DRAWING

South Valley Water Reclamation Facility
Lab Expansion and Remodel
7495 South 1300 West
West Jordan, Utah 84084

DESIGN: DESIGN, DRAWN
REVIEW: CHECKED, APPROVED

Door Schedule

DATE: October 25, 2018
PROJECT NUMBER: 17906.00

DRAWING NO. A-51

SHEET 23 OF 79

10/30/2018 1:45:15 PM

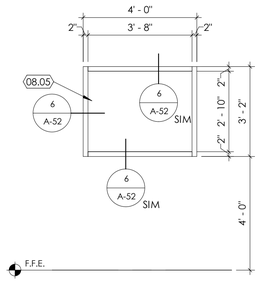

1 Type A
SCALE: 3/8" = 1'-0"

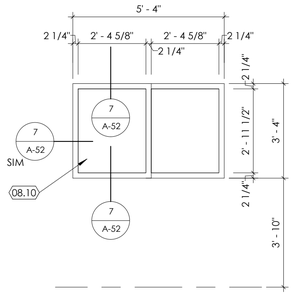

2 Type B
SCALE: 3/8" = 1'-0"

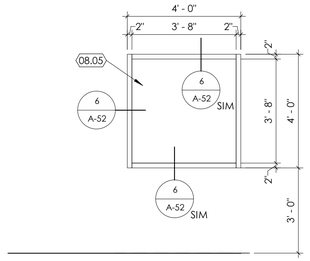

3 Type C
SCALE: 3/8" = 1'-0"

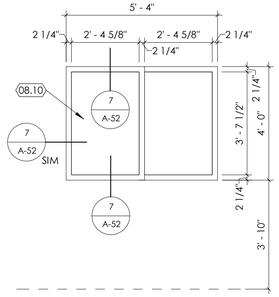

4 Type D
SCALE: 3/8" = 1'-0"

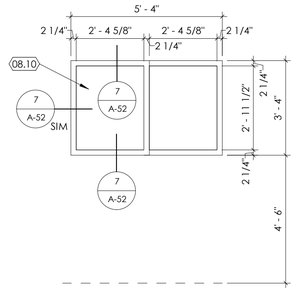

5 Type E
SCALE: 3/8" = 1'-0"

KEYED NOTES

08.05 CLEAR GLAZING, 1/4" THICK.
08.10 CLEAR, INSULATED, GLAZING 1" THICK. PROVIDE LOW E COATING ON ALL INSULATED GLASS UNITS.

GENERAL NOTES

A. SEE SHEETS A-02 AND A-04 FOR SYMBOLS, GENERAL NOTES AND LEGEND.
B. SEE SHEET A-53 FOR FINISH SCHEDULE.
C. SEE SHEET A-51 FOR DOOR SCHEDULE.
D. SEE SHEET A-52 FOR WINDOW SCHEDULE.
E. ALL EXISTING WALLS TO REMAIN ARE TO BE PATCHED AND REPAIRED AND MADE READY TO RECEIVE NEW FINISHES.

KEYED NOTES

1. GYPSUM BOARD, 5/8" THICK ATTACHED TO METAL STUD FRAMING.
2. HOLLOW METAL FRAME SEEN BEYOND.
3. GLAZING, SEE WINDOW SCHEDULE.
4. CONTINUOUS SEALANT ON BOTH SIDES OF FRAME. AT BUILDING EXTERIOR SIDE USE CAULKING WITH BACKER ROD. VERIFY CAULKING COLOR WITH ARCHITECT.
5. WINDOW GLAZING STOP. STOPS SHALL BE LOCATED ON THE (MORE SECURE) ROOM SIDE (AS OPPOSED TO THE LESS SECURE CORRIDOR SIDE). COORDINATE WITH ARCHITECT FOR LESS AND MORE SECURE AREAS THAT ARE NOT APPARENT IN FLOOR PLAN.
6. PROVIDE DOUBLE METAL STUDS AT FRAME JAMBS. PROVIDE STEEL STRAPS (6" HIGH 16 GAUGE STRAPS AT 2'-0" O.C.) FASTENED TO BOTH STUDS ON BOTH SIDES. HEADER PER SPAN LENGTH. SEE DETAIL 3/GA-01.
7. HOLLOW METAL WINDOW FRAME. FRAME THICKNESS VARIES WITH WALL THICKNESS. SEE FLOOR PLAN AND WALL SECTIONS FOR WALL THICKNESS. PAINT FRAME TO MATCH DOOR FRAMES.

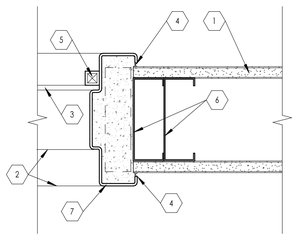

6 HM Window Jamb Detail - Stud
SCALE: 3" = 1'-0"

KEYED NOTES

1. 8" x 8" CMU WINDOW HEADER TO MATCH EXISTING BUILDING.
2. EXTERIOR PRECAST CONCRETE SILL.
3. SLIDING INSULATED GLASS WINDOW. SEE WINDOW TYPES.
4. EPOXY RESIN WINDOW SILL. MATCH COUNTERTOPS.
5. DRIP EDGE.
6. WINDOW TRACK.
7. CONTINUOUS CAULKING.
8. METAL STUD FRAMING WITH 5/8" GYP. BOARD, PAINTED.
9. EPOXY RESIN BACKSPLASH, MATCH COUNTERTOPS.

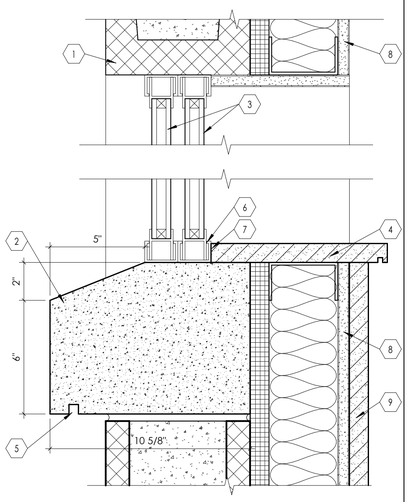

7 Sliding Window Head (Jamb Sim)
SCALE: 3" = 1'-0"

BOWEN COLLINS & ASSOCIATES
NJRA ARCHITECTS
5272 S. College Drive, Suite104
Murray, Utah 84123

STATE OF UTAH
SELVAM RAJAVELU
267857-0301
LICENSED ARCHITECT

NO.	DATE	REV. BY	DESCRIPTION

REVISIONS

VERIFY SCALE
BAR IS ONE INCH ORIGINAL DRAWING

South Valley Water Reclamation Facility
Lab Expansion and Remodel
7495 South 1300 West
West Jordan, Utah 84084

DESIGN — DESIGN — DRAWN
REVIEW — CHECKED — APPROVED

Window Schedule

PROJECT NUMBER 17906.00
DATE October 25, 2018

DRAWING NO. A-52
SHEET 24 OF 79

10/30/2018 1:45:18 PM

FINISH SCHEDULE

TAG	FINISH TYPE	DESCRIPTION	MANUFACTURER	STYLE	MODEL #	COLOR	COMMENTS
F1	FLOOR FINISH	COLORBODY PORCELAIN TILE	DALTILE	DIPLOMACY	DP02	MEDIUM GREY	1
F2	FLOOR FINISH	CARPET TILE	MOHAWK GROUP	PLACES AND SPACES III	GLAZE II - GT165	546 LAS VEGAS	2
F3	FLOOR FINISH	COLORBODY PORCELAIN TILE	DALTILE	HAUT MONDE	HM03	GLITTERATI GRANITE - UNPOLISHED	5
B1	WALL BASE	4" RUBBER	ROPPE	PINNACLE	#100	BLACK	4
W1	WALL FINISH	-	-	-	-	-	-
P1	PAINT	FIELD PAINT	SHERWIN WILLIAMS	SATIN/EGGSHELL	SW 6084	MODEST WHITE	-
P2	PAINT	ACCENT PAINT	SHERWIN WILLIAMS	SATIN/EGGSHELL	SW 7065	ARGOS	-
PL1	PLASTIC LAMINATE FINISH	MILLWORK VERTICAL LAMINATE (EXCEPT TOP DRAWERS)	WILSONART	VIRTUAL DESIGN LIBRARY	Y0356-60	SEA BERRY	-
PL2	PLASTIC LAMINATE FINISH	ACCENT LAMINATE (TOP DRAWER OR PANEL OF BASE CABINETS ONLY)	FORMICA	-	6473-58	FOLKSTONE HEX	-
SS1	SOLID SURFACE EPOXY RESIN	LAB COUNTERTOP	-	-	-	BLACK	3

COMMENTS

1. 12 x 24 TILE.
2. QUARTER TURNED INSTALLATION.
3. PROVIDE DRIP EDGE AT ALL CABINET SIDES AND FRONTS.
4. STANDARD TOE.
5. 2X2 MOSAIC TILE.

GENERAL NOTES

A. BASIS-OF-DESIGN FOR FINISHES. ALL FINISHES INDICATED ON THE FINISH LEGEND ARE BASED ON THE NAMED MANUFACTURER AND PRODUCTS, SUBJECT TO COMPLIANCE WITH REQUIREMENTS. PROVIDE THE NAMED PRODUCT OR A COMPARABLE PRODUCT BY ONE OF THE MANUFACTURERS LISTED IN THE RELEVANT SPECIFICATION SECTION IN THE PROJECT MANUAL.

B. WHERE MORE THAN ONE WALL FINISH IS CALLED OUT FOR A WALL, SEE INTERIOR ELEVATIONS FOR HEIGHT OF TRANSITION. SEE SAMPLE LAYOUT 2 BELOW.

C. VERIFY PAINTING SURFACE (SUCH AS STEEL, CONCRETE, MASONRY, GYPSUM BOARD, WOOD, ETC.) AND USE THE APPROPRIATE PAINT AND METHOD INDICATED IN THE PROJECT MANUAL.

D. PAINT ALL EXPOSED VISIBLE ITEMS SUCH AS METAL DECK, STEEL ANGLES, STEEL BEAMS, STEEL TRUSSES, MISC. STEEL ITEMS, PIPES, CONDUITS, ETC. UNLESS SPECIFIED BY THE ARCHITECT. DO NOT PAINT CONCEALED SURFACES, FINISHED METAL SURFACES, OPERATING PARTS, AND PRE-FINISHED ITEMS.

E. ALL GYPSUM BOARD SOFFITS SHALL BE PAINTED. COORDINATE ACCENT COLOR WITH ARCHITECT.

F. SEE 5/GA-09 FOR TYPICAL FLOOR COVERING TRANSITIONS.

G. SEE INTERIOR ELEVATIONS FOR PLASTIC LAMINATE FINISHES OVER CABINETS, COUNTERTOPS, WALLS, ETC. PLASTIC LAMINATE FINISHES ARE INDICATED AS PL1, PL2, ETC. COUNTERTOPS THAT ARE SOLID SURFACE (AND NOT PLASTIC LAMINATE WRAPPED), ARE INDICATED AS SS1, SS2, ETC.

SAMPLE LAYOUTS

SAMPLE LAYOUT 1

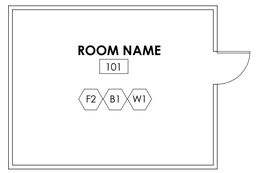

NOTE: AS INDICATED IN ROOM NUMBER 101, MAJORITY OF THE ROOMS IN THE PROJECT SHALL HAVE A SINGLE TYPE OF FLOOR FINISH, WALL BASE AND WALL FINISH. WALL FINISH INDICATED AS "W2" SHALL APPLY TO ALL FOUR WALLS FROM FLOOR TO CEILING.

SAMPLE LAYOUT 2

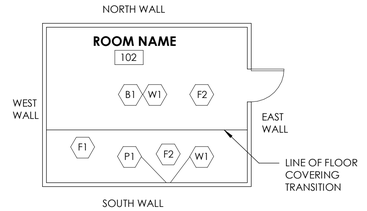

NOTE: AS INDICATED IN ROOM NUMBER 102, SOME ROOMS SHALL HAVE MULTIPLE FLOOR AND WALL FINISHES. THE WALL FINISH INDICATED AS "W1" IN THE ROOM (WITHOUT AN ARROW POINTING TO ANY SPECIFIC WALL) SHALL APPLY TO THE WEST, NORTH AND EAST WALL. WHERE WALL FINISHES ARE INDICATED WITH AN ARROW POINTING TO THE SOUTH WALL, SHALL HAVE MULTIPLE FINISHES SUCH AS "P1" AND "W1". SEE INTERIOR ELEVATIONS FOR TRANSITION DETAILS BETWEEN "P1" AND "W1".

BOWEN COLLINS & ASSOCIATES
NJRA ARCHITECTS
5272 S. College Drive, Suite104
Murray, Utah 84123

STATE OF UTAH
SELVAM RAJAVELU
267857-0301
LICENSED ARCHITECT

NO.	DATE	REV. BY	DESCRIPTION
			REVISIONS

South Valley Water Reclamation Facility
Lab Expansion and Remodel
7495 South 1300 West
West Jordan, Utah 84084

VERIFY SCALE
BAR IS ONE INCH
ORIGINAL DRAWING

DESIGN: DESIGN, DRAWN
REVIEW: CHECKED, APPROVED

Finish Schedule

PROJECT NUMBER 17906.00
DATE October 25, 2018

DRAWING NO. A-53
SHEET 25 OF 79

10/30/2018 1:45:21 PM

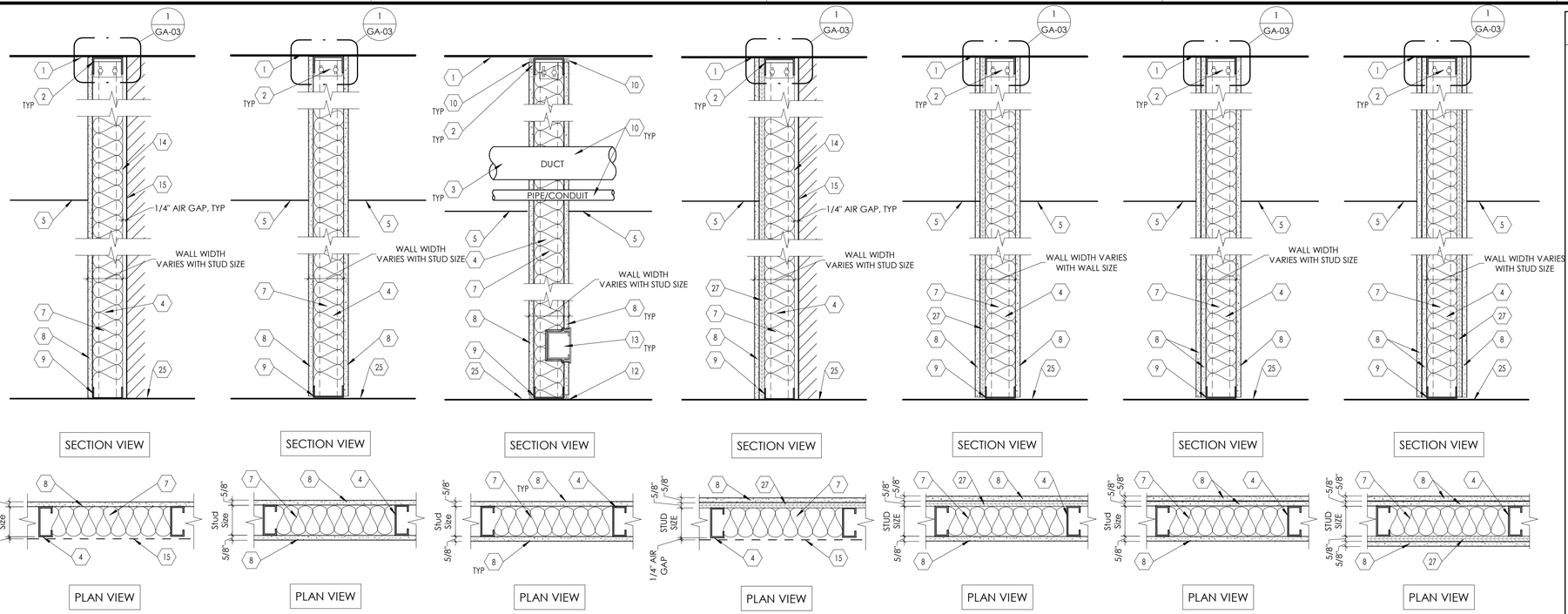

WALL TYPE	STUD SIZE	WALL WIDTH
A1	1 1/2"	2 1/8"
A2	2 1/2"	3 1/8"
A3	3 5/8"	4 1/4"
A6	6"	6 5/8"

Type - A
Metal Stud Furring Wall

WALL TYPE	STUD SIZE	WALL WIDTH
B2	2 1/2"	3 3/4"
B3	3 5/8"	4 7/8"
B6	6"	7 1/4"

Type - B
Typical Metal Stud Wall

WALL TYPE	STUD SIZE	WALL WIDTH	U.L. DESIGN #
C3	3 5/8"	4 7/8"	U465
C4	4"	5 1/4"	U465
C6	6"	7 1/4"	U465

Type - C
1 Hour Fire Rated

WALL TYPE	STUD SIZE	WALL WIDTH
D1	1 1/2"	2 3/4"
D2	2 1/2"	3 3/4"
D3	3 5/8"	4 7/8"
D6	6"	7 1/4"

Type - D
Metal Stud Furring Wall w/ Ply Wood

WALL TYPE	STUD SIZE	WALL WIDTH
E2	2 1/2"	4 3/8"
E3	3 5/8"	5 1/2"
E6	6"	7 7/8"

Type - E
Metal Stud Wall w/ Ply Wood

WALL TYPE	STUD SIZE	WALL WIDTH
F2	2 1/2"	4 3/8"
F3	3 5/8"	5 1/2"
F6	6"	7 7/8"

Type - F
Metal Stud Wall

WALL TYPE	STUD SIZE	WALL WIDTH
G2	2 1/2"	5"
G3	3 5/8"	6 1/8"
G6	6"	8 1/2"

Type - G
Metal Stud Wall

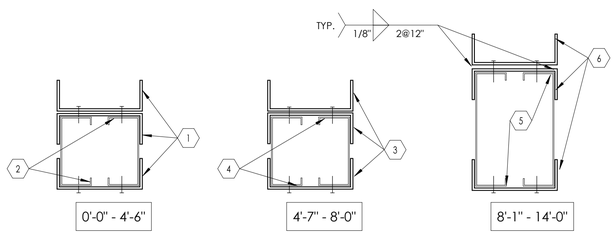

KEYED NOTES
1. METAL TRACK, 18 GA
2. METAL STUDS, 18 GA
3. METAL TRACK, 16 GA
4. METAL STUDS, 16 GA
5. 6" METAL STUDS, 14 GA
6. METAL TRACK, 14 GA

NOTE:
ALL FASTENERS TO BE #12 SMS @2'-0" O.C.
TYP., U.N.O.

3 Typical Door and Window Opening Framing at Header
SCALE: 3" = 1'-0"

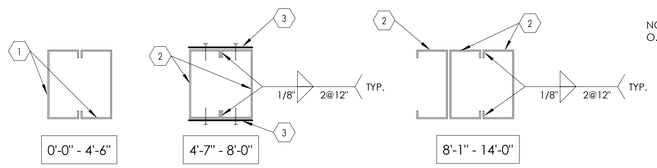

KEYED NOTES
1. METAL STUDS, 18 GA
2. METAL STUDS, 16 GA
3. 2" X 20 GA METAL STRAP AT 3'-6" O.C. EACH SIDE

NOTE: ALL FASTENERS TO BE #12 SMS @2'-0" O.C. TYP.,

4 Typical Door and Window Opening Framing at Jamb
SCALE: 3" = 1'-0"

KEYED NOTE
1. LINE OF FLOOR OR ROOF DECK AS OCCURS.
2. TO ACCOMMODATE FOR STRUCTURE DEFLECTION, PROVIDE SLIP CONNECTION BETWEEN TOP RUNNER TRACK AND METAL STUD FRAMING. SEE DETAIL **6 / GA-02**
3. STUD FRAMING AROUND DUCT OPENINGS. SEE DETAIL **2 / GA-02**
4. METAL STUDS, 20 GA STRUCTURAL (33 MILS) AT 16" O.C. U.N.O. BASED ON WALL TYPES INDICATED IN FLOOR PLAN. PROVIDE STUD SIZE AS INDICATED IN WALL TYPES WITH TRACK RUNNERS AT TOP AND BOTTOM. FOR STUD FRAMING AROUND DOOR AND WINDOW OPENINGS, SEE DETAIL **2 / GA-02**
5. LINE OF CEILING AS OCCURS SEE REFLECTED CEILING PLAN.
6. STEEL STUDS. "C-H" SHAPED, 20 GA STRUCTURAL AT 24" O.C.
7. PROVIDE ACOUSTIC INSULATION BLANKET FOR FULL DEPTH OF THE STUD CAVITY THROUGHOUT, UNO. FOR 4" & 3 5/8" STUDS PROVIDE R-13 UNFACED BATT INSULATION AND FOR 6" STUDS PROVIDE R-19 UNFACED BATT INSULATION. PROVIDE KRAFT FACED INSULATION FOR ALL APPLICATIONS AT EXTERIOR WALLS.
8. GYPSUM BOARD, 5/8" THICK, TYPE 'X' , U.N.O, ATTACHED TO METAL STUD FRAMING. SEE GENERAL NOTE 'B'.
9. ANCHOR BASE TRACK TO CONCRETE FLOOR BELOW. SEE DETAIL **4 / GA-02**
10. FILL GAP BETWEEN DECK AND METAL TRACK TOP RUNNER WITH FIRESTOP SEALANT. SEAL TIGHTLY AROUND ALL PIPES, CONDUITS, DUCTS, ETC. ON EACH SIDE OF THE FIRE BARRIER WALL (CONTINUOUS) WITH APPROVED FIRESTOP SEALANT INSTALLED AROUND ALL PENETRATIONS TO MAINTAIN THE INTEGRITY OF THE FIRE BARRIER.
11. FILL GAP BETWEEN DECK AND METAL TRACK TOP RUNNER WITH ACOUSTIC SEALANT. SEAL TIGHTLY AROUND ALL PIPES, CONDUITS, DUCTS, ETC. ON EACH SIDE OF THE WALL (CONTINUOUS) AND AROUND ALL PENETRATIONS TO MAINTAIN THE INTEGRITY OF THE WALL.
12. STOP GYPSUM BOARD 1/4" ABOVE THE FLOOR TYP. ON EACH SIDE OF WALL. PROVIDE ACOUSTIC SEALANT AT SOUND WALLS AND FIRESTOP SEALANT AT RATED WALLS ON EACH SIDE OF THE WALL (CONTINUOUS).
13. OUTLET BOX AS OCCURS. PROVIDE FIRE BARRIER MOLDABLE PUTTY PADS AND FIRESTOP SEALANT AROUND ELECTRICAL BOXES AT ALL RATED WALLS AND SOUND BARRIER WALLS AND AT BACK TO BACK ELECTRICAL BOXES AT SMOKE PARTITION WALLS, TYP.
14. PROVIDE STRAPPING AND BLOCKING AT FURRING WALL. SEE DETAIL **3 / GA-02**
15. LINE INDICATES EXISTING WALL OR STRUCTURE. PROVIDE 1/4" AIR GAP.
16. GYPSUM BOARD SHAFT LINER PANEL, 1" THICK, TYPE 'X', ATTACHED TO C-H STUDS.
17. STEEL RUNNER, 'J' SHAPED WITH UNEQUAL LEGS OF 1" AND 2", 20 GA, ATTACHED TO FLOOR AND STRUCTURE ABOVE WITH FASTNERS LOCATED NO GREATER THAN 2" FROM ENDS AND NO MORE THAN 24" O.C. RUNNERS SHOULD BE POSITIONED WITH SHORT LEG TO FINISHED SIDE OF WALL.
18. STOP STUD RUNNER AT BASE PLATES.
19. 3/8" THICK STEEL PLATE WITH 4-1/2" DIA. HILTI-HY200 EPOXY ANCHORS WITH 2-3/8" HILTI-HIT -2 ANCHORS. EMBED INTO CONCRETE 2-3/8"
20. TUBE STEEL 3" x 3" x 3/16" AT 6'- 0" O.C.
21. WALL CAP, SOLID SURFACE MATERIAL ATTACHED TO WALL BELOW.
22. PLYWOOD, 3/4" THICK, CONTINOUS FIRE TREATED. ATTACH PLYWOOD TO VERTICAL STEEL TUBE POST WITH 'L' SHAPED METAL CLIPS AND FASTENERS.
23. PROVIDE 1/4" RADIOUS ROUNDED EDGE, CONTINOUS.
24. METAL STUDS 16GA STRUCTURAL (35 MIL) AT 16" O.C. PROVIDE RUNNERS AT TOP AND BOTTOM. ATTACH TOP RUNNER TO PLYWOOD AND VERTICAL STEEL POST.
25. LINE OF FLOOR.
26. 2" X 1/2" RESILIENT CHANNEL INSTALLED HORIZONTALLY AND SPACED AT 24" O.C.
27. PLYWOOD, 5/8" THICK, CONTINOUS FIRE TREATED. ATTACH PLYWOOD TO VERTICAL STEEL TUBE POST WITH 'L' SHAPED METAL CLIPS AND FASTENERS.

GENERAL NOTES

A. CONTRACTOR SHALL VERIFY ITEMS LIKE SEMI OR FULLY RECESSED MISCELLANEOUS BOXES, PANELS, PLUMBING LINES, CONDUITS, PIPES, ETC. THAT ARE CONCEALED IN THE WALL. IF 3-5/8" METAL STUD ARE INADEQUATE, CONTRACTOR SHALL NOTIFY THAT ARCHITECT AND USE 6" STUDS. COORDINATE WITH ALL THE CONSULTANT DRAWINGS PRIOR TO WALL CONSTRUCTION AND USE 6" OR 8", 20 GAUGE METAL STUDS FOR FRAMING IN LIEU OF 3-5/8" METAL STUDS.

B. USE 5/8" CEMENTITIOUS BOARD IF CERAMIC OR PORCELAIN WALL TILES ARE INDICATED IN THE FINISH SCHEDULES AS WALL FINISH. CEMENTITIOUS BOARD SHALL EXTEND FROM FINISHED FLOOR TO HEIGHT OF TILE. 5/8" WATER RESISTANT GYPSUM BOARD TO BE USED ABOVE TILE HEIGHT IN RESTROOMS. SEE FLOOR PLANS FOR CERTAIN UNIQUE LOCATIONS THAT REQUIRE LEAD LINED GYPSUM BOARD, IMPACT RESISTANT GYPSUM BOARD, SOUND ATTENUATION GYPSUM BOARD, ETC.

C. PROVIDE CONTROL JOINT AS PER DETAIL **1 / GA-02** WHEN LENGTH OF GYPSUM BOARD EXCEEDS 50' IN ONE DIRECTION OR AS DIRECTED BY ARCHITECT. COORDINATE WITH ARCHITECT FOR CONTROL JOINT LOCATIONS. WHEN GYPSUM BOARD OR CEMENTITIOUS BOARD IS ATTACHED VERTICALLY, USE 1" LONG #6 DRYWALL SCREWS TO EACH STUD. SCREWS ARE 8" O.C. AT PERIMETER AND 12" AT INTERMEDIATE STUD. WHEN GYPSUM BOARD IS ATTACHED HORIZONTALLY TO STUDS, HORIZONTAL JOINTS SHALL BE STAGGERED WITH THOSE ON THE OPPOSITE SIDE. SCREWS FOR HORIZONTAL APPLICATION SHALL BE 8" O.C. AT VERTICAL EDGES AND 12" O.C. AT INTERMEDIATE STUDS.

D. FOR LOCATION OF FIRE RATED WALLS AND SMOKE PARTITION WALLS SEE CODE COMPLIANCE PLAN.

E. SEE DIMENSION FLOOR PLANS FOR WALL TYPES USED IN THIS PROJECT. SOME WALL TYPES MAY NOT BE USED IN THIS PROJECT.

F. WHERE LEAD LINED WALLS ARE INDICATED ON THE DRAWINGS, USE 16 GA STUDS IN LIEU OF THE GUAGE OF STUDS CALLED OUT IN THE WALL TYPES.

BOWEN COLLINS & ASSOCIATES
NJRA ARCHITECTS
5272 S. College Drive, Suite104
Murray, Utah 84123
STATE OF UTAH
SELVAM RAJAVELU
267857-0301
LICENSED ARCHITECT

NO.	DATE	REV. BY	DESCRIPTION

REVISIONS

VERIFY SCALE
BAR IS ONE INCH ON ORIGINAL DRAWING

South Valley Water Reclamation Facility
Lab Expansion and Remodel
7495 South 1300 West
West Jordan, Utah 84084

DESIGN | REVIEW | CHECKED | APPROVED | DESIGN | DRAWN

Wall Types and Details

PROJECT NUMBER 17906.00
DATE October 25, 2018

DRAWING NO. GA-01
SHEET 26 OF 79

10/30/2018 1:45:25 PM

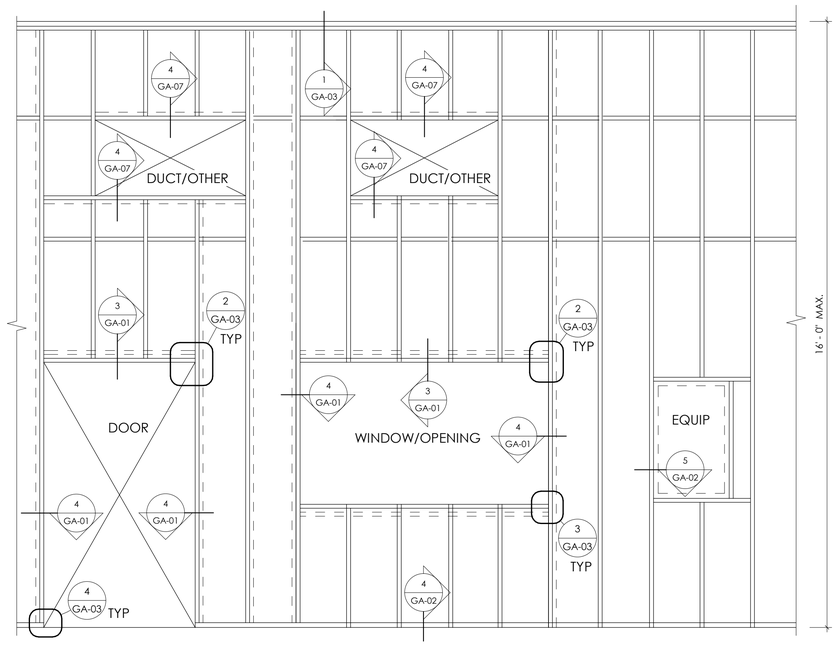

2 Typical Wall and Opening Framing Detail

SCALE: 1/2" = 1'-0"

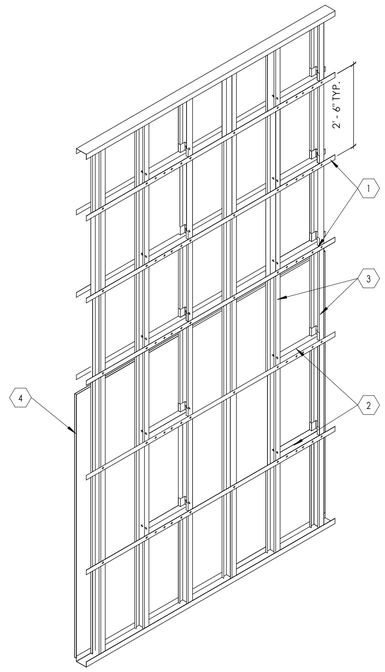

KEYED NOTES

1. SHEET METAL STRAP. SEE BRACING SCHEDULE BELOW AND DETAIL
2. METAL STUD BLOCKING. SEE BRACING SCHEDULE BELOW AND DETAIL
3. METAL STUDS, 20 GA MIN. SEE WALL TYPES FOR PARTITION TYPE.
4. 5/8", TYPE 'X' GYP. BD. TYP., U.N.O. SEE WALL TYPES FOR PARTITION TYPE.

BRACING SCHEDULE

1. WHERE NO GYP. BD. OCCURS EITHER SIDE PROVIDE:
   A. METAL STUD BLOCKING AT ENDS AND 8'-0" O.C. HORIZONTALLY AND 2'-6" O.C. VERTICALLY.
   B. 20 GA. X 2" STRAP CONT. EACH SIDE AT 2'-6" O.C. MAX.
2. WHERE GYP. BD OCCURS ONE SIDE ONLY PROVIDE:
   A. 20 GA X 2" STRAP CONT. OPPOSITE SIDE FROM GYP BD. AT 2'-6" O.C. MAX.

3 Typical Bracing at One Sided Partition

SCALE: 3" = 1'-0"

KEYED NOTES

1. GYPSUM BOARD, ATTACHED TO METAL STUD FRAMING. SEE WALL TYPES AND WALL SECTIONS FOR GYPSUM BOARD TYPE.
2. EXPANSION JOINT ("E-Z STRIP, V-SHAPED VINYL EXPANSION JOINT BY NATIONAL GYPSUM COMPANY OR EQUIVALENT) ATTACHED TO GYPSUM BOARD.
3. METAL STUDS. SEE WALL TYPES AND WALL SECTIONS FOR STUD SIZE, THICKNESS, GAUGE, SPACING, ETC.
4. TWO LAYERS OF TYPE 'X' GYPSUM BOARD, 5/8" THICK, ATTACHED TO STUDS WITH DRYWALL SCREWS, 1-5/8" @ 24" O.C. USE NON FIRE RATED GYPSUM BOARD IF WALLS OR CEILING ARE NOT FIRE RATED.

NOTE:
PROVIDE JOINT AT EVERY 50'-0" OF WALL THAT RUNS IN THE SAME DIRECTION. PRIOR TO INSTALLATION OF JOINTS, GET APPROVAL FROM ARCHITECT FOR CONTROL JOINT LOCATIONS IN WALL.

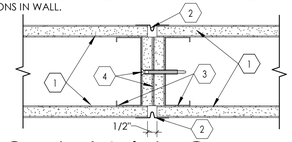

PLAN VIEW

1 Control Joint - Gypsum Board

SCALE: 3" = 1'-0"

KEYED NOTES

1. METAL STUDS. SEE WALL TYPES.
2. .014" DIA. POWDER DRIVEN PINS WITH 1-1/4" MIN. EMBED AT 2" FROM THE ENDS.
3. METAL TRACK - 18 GA MIN.
4. #12 SHEET METAL SCREWS EA. SIDE.

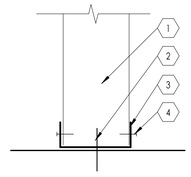

4 Base Track Detail

SCALE: 3" = 1'-0"

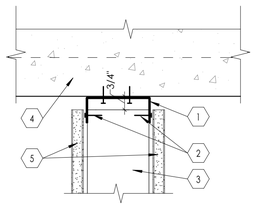

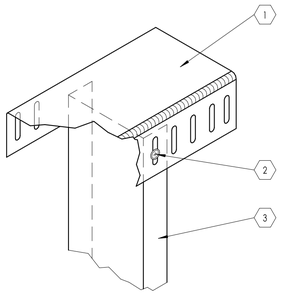

ISOMETRIC VIEW OF SLOTTED TOP TRACK

KEYED NOTES

1. SLOTTED DEEP LEG DEFLECTION TRACK, 16GA CONTINUOUS. SECURE TO SUPERSTRUCTURE ABOVE IN A WAY THAT PROVIDES LATERAL STABILITY (PERPENDICULAR-TO AND IN-PLANE WITH WALL) YET ALLOWING FOR A MINIMUM OF 3/4" OF VERTICAL DEFLECTION OF THE SUPERSTRUCTURE.
2. SLIP CONNECTION. SECURE VERTICAL STUDS TO SLOTTED TOP TRACK AT MID-HEIGHT OF VERTICAL SLOTS IN TRACK. COMPONENTS INTENDED TO SLIDE VERTICALLY AS SUPERSTRUCTURE DEFLECTS.
3. VERTICAL STUD. SEE INTERIOR WALL TYPES ON SHEET GA-01.
4. FLOOR OR ROOF DECK AS OCCURS.
5. GYPSUM BOARD, 5/8" THICK, TYPE 'X', TYPICAL. DO NOT SCREW GYPSUM WALLBOARD TO TOP TRACK OR SUPERSTRUCTURE. GWB SCREWS INTO THE STUDS MUST BE AT LEAST 1" BELOW THE BOTTOM OF THE TOP TRACK.

GENERAL NOTES

A. CONDITIONS INDICATED SHOW DESIGN INTENT, ESPECIALLY IN REGARD TO ACCOMMODATION OF STRUCTURAL DEFLECTION AND CONTINUITY OF INTEGRITY OF SOUND, SMOKE AND FIRE WALLS.
B. DESIGN INTENT DETAILS MAY NOT SHOW ALL CONDITIONS TO BE ENCOUNTERED ON A PROJECT.
C. RIGIDLY SECURE SLOTTED TOP TRACK TO BUILDING SUPERSTRUCTURE IN AN APPROVED MANNER. EMPLOY Z-BARS, COLD-ROLLED CHANNELS OR SIMILAR SPACER TO ACCOMMODATE THICKNESS OF SPRAY-APPLIED FIRE-RESISTIVE MATERIALS (SFRM).
D. SLOTTED TOP TRACK, INDICATED ON THESE DETAILS, IS THE BASIS FOR DESIGN AND REFERS TO DEEP-LEG TRACKS WITH VERTICALLY SLOTTED HOLES.
E. REFER TO PARTITION STANDARDS FOR SPECIFIC WALL TYPES.
F. AT FIRE -RATED WALLS REFER TO SPECIFICATIONS FOR ADDITIONAL REQUIREMENTS REGARDING HEAD-OF-WALL CONDITIONS.
G. MAINTAIN ACOUSTIC RATING WHERE SOUND-CONTROL WALLS ARE INDICATED.
H. FIRESTOPPING AND ACOUSTICAL SEALANTS SHALL AUTOBOND. PROVIDE EXPOSED CLEAN SEALANT (TO CONCEAL FIRESTOPPING) AT FOOD SERVICE FACILITIES, KITCHEN, BIOLOGICAL CONTAINMENT AND CLEAN ROOM APPLICATIONS.
I. WHERE A WALL IS DESIGNATED AS BOTH A SOUND-CONTROL WALL AND A FIRE-RATED WALL, REFER TO FIRE-RATED HEAD-OF-WALL CONDITIONS.
J. WHERE A WALL IS DESIGNATED AS A SOUND-CONTROL WALL, FILL ALL VOIDS WITH SOUND ATTENUATION BATTS (SAB).
K. AT SMOKE PARTITIONS AND SOUND-CONTROL WALLS EXTEND GWB ON BOTH SIDES INTO THE FLUTES, CUT TO FOLLOW UNDULATING SURFACES OF THE SUPERSTRUCTURE INCLUDING, BUT NOT LIMITED TO, FLUTES IN METAL DECKING. PROVIDE A CONTINUOUS BEAD OF SEALANT (AS SPECIFIED) TO SUPERSTRUCTURE.

6 Slip Connection Detail

SCALE: 3" = 1'-0"

TYPE '1' BACKING

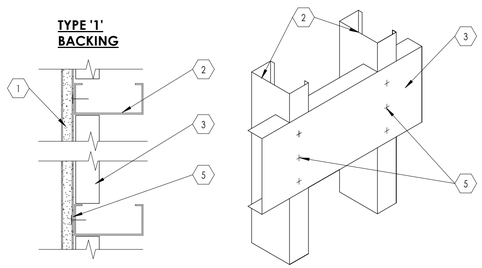

TYPE '2' BACKING

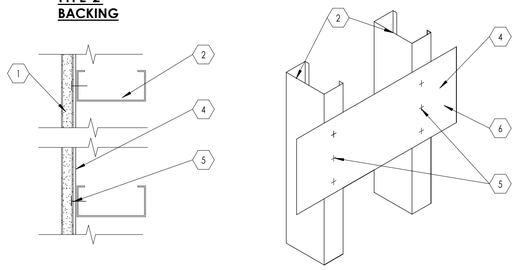

KEYED NOTES

1. 5/8", TYPE 'X' GYP. BD.
2. EXISTING OR NEW 3 5/8" OR 6" METAL STUDS AT 16" O.C.
3. 6 X 16 GA METAL STUD BLOCKING, EXTEND BLOCKING TO NEXT STUD BEYOND EQUIPMENT -TYPICAL BOTH SIDES.
4. 6" X 16" GA SHEET METAL BACKING, EXTEND BLOCKING TO NEXT STUD BEYOND EQUIPMENT - TYPICAL BOTH SIDES.
5. 3 #10 SHEET METAL SCREW AT EACH STUD.
6. WHERE WALL TYPE INCLUDES RESILIENT CHANNELS, USE ADDITIONAL CHANNELS AS FURRING FOR BACKING AS REQUIRED.

GENERAL NOTES

1. EXTEND BACKING PLATE TO NEXT STUD BEYOND SIDE OF FIXTURE OR ACCESSORIES - BOTH SIDES.
2. PROVIDE METAL SLEEVES THROUGH WALL FINISH AT FIXTURE AND EQUIPMENT FASTENING.
3. FOR MECHANICAL WORK ANCHORAGE SEE MECHANICAL DRAWINGS.

7 Backing Plate Schedule

SCALE: 3" = 1'-0"

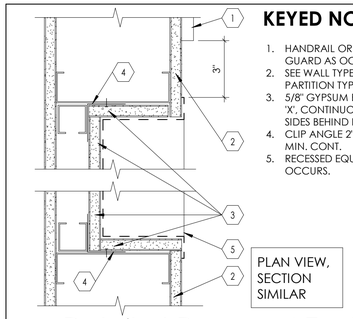

PLAN VIEW, SECTION SIMILAR

KEYED NOTES

1. HANDRAIL OR CORNER GUARD AS OCCURS.
2. SEE WALL TYPES FOR PARTITION TYPE.
3. 5/8" GYPSUM BOARD, TYPE 'X', CONTINUOUS ON ALL SIDES BEHIND EQUIPMENT.
4. CLIP ANGLE 2" X 2" X 20 GA MIN. CONT.
5. RECESSED EQUIPMENT AS OCCURS.

5 Detail at Recessed Equip.

SCALE: 3" = 1'-0"

KEYED NOTES

1. METAL STUDS, 3 5/8" THICK, 16 GA AS SHOWN.
2. 8" WIDE X (HEIGHT OF WALL BRACKET + 6") HIGH X 16 GA BACKING PLATE. ANCHOR TO 16 GA STUDS.
3. #10 SHEET METAL SCREWS THROUGHOUT 9/64" DIAMETER HOLES AT 18" O.C.
4. GYPSUM BOARD, 5/8" THICK, TYPE 'X', TYPICAL U.N.O.DV
5. ERGOTRON LX WALL MOUNT BRACKET, TV BRACKET, PHYSIOLOGICAL MONITOR, ETC O.F.C.I.

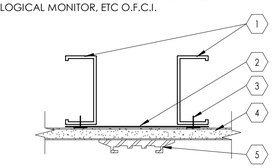

8 Plan Detail at Bracket

SCALE: 3" = 1'-0"

BOWEN COLLINS & ASSOCIATES
NJRA ARCHITECTS
5272 S. College Drive, Suite104
Murray, Utah 84123

STATE OF UTAH
SELVAM RAJAVELU
267857-0301
LICENSED ARCHITECT

NO.	DATE	REV. BY	DESCRIPTION
			REVISIONS

VERIFY SCALE
BAR IS ONE INCH ON ORIGINAL DRAWING

South Valley Water Reclamation Facility
Lab Expansion and Remodel
7495 South 1300 West
West Jordan, Utah 84084

DESIGN | DRAWN | CHECKED | APPROVED | REVIEW

Details

PROJECT NUMBER 17906.00
DATE October 25, 2018

DRAWING NO. GA-02
SHEET 27 OF 79

10/30/2018 1:45:26 PM

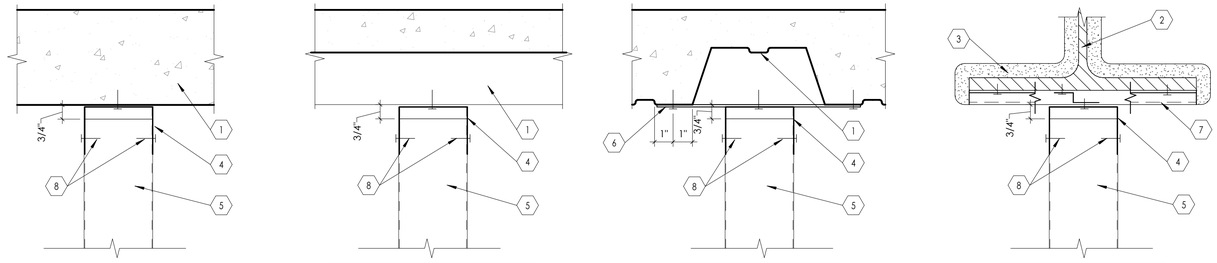

KEYED NOTES

1. FLOOR OR ROOF DECK AS OCCURS.
2. STEEL BEAM AS OCCURS. SEE STRUCTURAL DRAWINGS.
3. SPRAY APPLIED FIRE RESISTIVE MATERIAL (SFRM).
4. SLOTTED TOP TRACK. FOR ADDITIONAL INFORMATION SEE DETAIL **6 / GA-02**
5. METAL STUD WALL. SEE WALL TYPES ON SHEET A501 FOR ADDITIONAL INFORMATION.
6. 2" x 18" GA STRAPS AT 16" O.C.
7. 20 GA Z-BARS TO ACCOMMODATE SFRM THICKNESS.

1 Head Condition at Non Fire Rated, Non Smoke Rated and Non Sound Barrier Partitions

SCALE: 3" = 1'-0"

KEYED NOTES

1. METAL STUDS. SEE WALL TYPES.
2. .014" DIA. POWDER DRIVEN PINS WITH 1-1/4" MIN. EMBED AT 2'-0" O.C. AND AT 2" FROM THE ENDS.
3. METAL TRACK - 18 GA MIN.
4. #12 SHEET METAL SCREWS EA. SIDE.
5. BENT TRACK - 18 GA MIN.

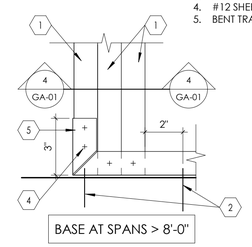

BASE AT SPANS > 8'-0"

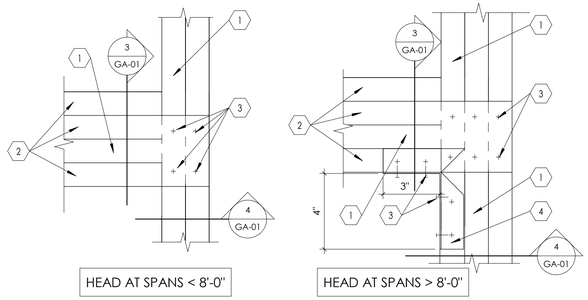

KEYED NOTES

1. METAL STUDS. SEE DETAIL **3 / GA-01**
2. METAL TRACK. SEE DETAIL **3 / GA-01**
3. 4 #12 SHEET METAL SCREWS EA. SIDE.
4. BENT TRACK - 18 GA MIN. COPE WEB AT JAMB-HEADER CONDITION.

2 Framed Opening at Jamb/Head Corner

SCALE: 3" = 1'-0"

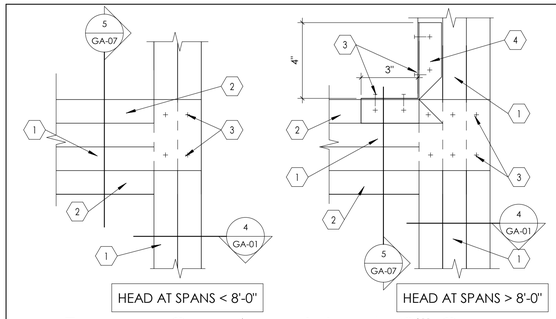

KEYED NOTES

1. METAL STUDS. SEE DETAIL **5 / GA-07**
2. METAL TRACK. SEE DETAIL **5 / GA-07**
3. 4 #12 SHEET METAL SCREWS EA. SIDE.
4. BENT TRACK - 18 GA MIN. COPE WEB AT JAMB-SILL CONDITION.

3 Framed Opening at Jamb/Sill Corner

SCALE: 3" = 1'-0"

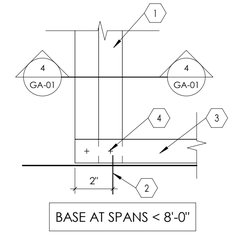

BASE AT SPANS < 8'-0"

4 Framed Opening at Jamb

SCALE: 3" = 1'-0"

KEYED NOTES

1. EXPOSED CROSS GRID MEMBER @ 2'-0" O.C.
2. EXPOSED MAIN GRID MEMBER @ 4'-0"
3. HANGER WIRE 12 GA. @ 4'-0" O.C. MAX EACH WAY
4. SEISMIC RESTRAINT. SEE DETAIL **2 / GA-04**
5. SLOTTED ANGLE SPACER

NOTE:
EXCEPT WHERE RIGID BRACES ARE USED TO LIMIT LATERAL DEFLECTIONS, SPRINKLER HEADS AND OTHER PENETRATIONS SHALL HAVE A 2" OVERSIZE RING, SLEEVE, OR ADAPTER THROUGH THE CEILING TO ALLOW FOR FREE MOVEMENT OF AT LEAST 1" IN ALL HORIZONTAL DIRECTIONS.

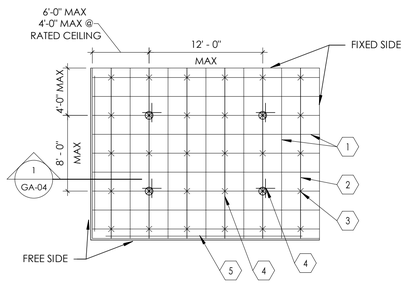

5 Typical Acoustical Ceiling Suspension

SCALE: 1/8" = 1'-0"

KEYED NOTES

1. NEW MECHANICAL UNIT. SEE MECHANICAL DRAWINGS.
2. METAL CURB. COORDINATE WITH MECHANICAL DRAWINGS.
3. NEW STEEL ANGLE TO SUPPORT CURB, WELDED TO EXISTING WIDE FLANGE BEAM. SEE STRUCTURAL DRAWINGS.
4. EXISTING STRUCTURAL FRAMING. SEE STRUCTURAL DRAWINGS.
5. EXISTING METAL DECKING. SEE STRUCTURAL DRAWINGS.
6. EXISTING ROOFING MEMBRANE.
7. NEW ROOFING MEMBRANE, SINGLE PLY. EXTEND AS SHOWN TO WRAP TOP OF CURB. SEE MECHANICAL DRAWINGS.
8. CONTINUOUS EXTERIOR GRADE SEALANT.
9. CONTINUOUS SHEET METAL FLASHING WITH CLEAT. FINISH TO MATCH OTHER PARAPET CAP FLASHING.
10. EXISTING RIGID INSULATION WITH VAPOR BARRIER BETWEEN DECK AND INSULATION.

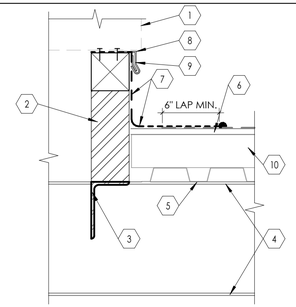

6 Roof Curb Detail

SCALE: 1 1/2" = 1'-0"

BOWEN COLLINS & ASSOCIATES
NJRA ARCHITECTS
5272 S. College Drive, Suite104
Murray, Utah 84123

STATE OF UTAH
SELVAM RAJAVELU
267857-0301
LICENSED ARCHITECT

NO.	DATE	REV. BY	DESCRIPTION

REVISIONS

VERIFY SCALE
BAR IS ONE INCH
ORIGINAL DRAWING

South Valley Water Reclamation Facility
Lab Expansion and Remodel
7495 South 1300 West
West Jordan, Utah 84084

DESIGN
DESIGN
DRAWN
REVIEW
CHECKED
APPROVED

Details

PROJECT NUMBER 17906.00
DATE October 25, 2018

DRAWING NO. GA-03
SHEET 28 OF 79

10/31/2018 9:11:10 AM

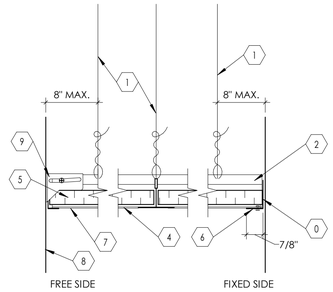

KEYED NOTES

1. CLASS 1 ZINC COATED, SOFT TEMPERED WIRES, 12 GAUGE MIN.
2. PROVIDE 3/4" GAP BETWEEN CEILING GRID AND ANGLE ON TWO ADJACENT SIDES OF THE ROOM. DO NOT ATTACH CEILING GRID TO WALL ANGLE.
3. ATTACH CEILING GRID TO WALL ANGLE ON TWO ADJACENT SIDES OF THE ROOM (FIXED SIDES).
4. EXPOSED CROSS RUNNER ATTACHED TO MAIN RUNNERS.
5. ACOUSTICAL CEILING TILES. SEE CEILING PLANS.
6. 7/8" SUPPORTING CLOSURE ANGLE AT CEILING PERIMETER ATTACHED TO WALL.
7. EXPOSED MAIN RUNNER SHALL BE HEAVY DUTY T-BAR GRID SYSTEM SUSPENDED FROM STRUCTURE ABOVE. THIS END OF THE GRID SHALL REST UPON AND BE FREE TO SLIDE ON THE CLOSURE ANGLE.
8. LINE OF WALL.
9. SEISMIC CLIPS. BASIS OF DESIGN ARMSTRONG BERC 2 CLIPS IN LIEU OF 2" WALL ANGLE PER ICC-ESR 1308.

NOTE:
EXCEPT WHERE RIGID BRACES ARE USED TO LIMIT LATERAL DEFLECTIONS, SPRINKLER HEADS AND OTHER PENETRATIONS SHALL HAVE A 2" OVERSIZE RING, SLEEVE, OR ADAPTER THROUGH THE CEILING TO ALLOW FOR FREE MOVEMENT OF AT LEAST 1" IN ALL HORIZONTAL DIRECTIONS.

1 Ceiling Grid Detail

SCALE: 3" = 1'-0"

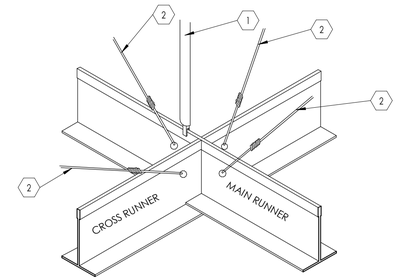

KEYED NOTES

1. RIGID HORIZONTAL RESTRAINT FROM CEILING GRID TO STRUCTURE ABOVE.
2. CLASS 1 ZINC COATED, SOFT TEMPERED WIRES, 12 GAUGE MIN.

NOTE:
A. CEILING GRIDS IN ROOMS OR AREAS GREATER THAN 1,000 SQ. FT. SHALL HAVE A RIGID HORIZONTAL RESTRAINT FROM CEILING TO STRUCTURE ABOVE AT EVERY 144 SQ. FT.
B. ALL SPLAYED WIRES SHALL BE AT 45 DEGREES ANGLES, 12 GAUGE AND GALVANIZED.
C. WHEN CEILING AREA EXCEEDS 2,500 SQ. FT. PROVIDE SEISMIC SEPARATION JOINT APPROVED BY CEILING GRID MANUFACTURER AND ARCHITECT.

NOTE: EXCEPT WHERE RIGID BRACES ARE USED TO LIMIT LATERAL DEFLECTIONS, SPRINKLER HEADS AND OTHER PENETRATIONS SHALL HAVE A 2" OVERSIZE RING, SLEEVE, OR ADAPTER THROUGH THE CEILING TO ALLOW FOR FREE MOVEMENT OF AT LEAST 1" IN ALL HORIZONTAL DIRECTIONS.

2 Ceiling Detail

SCALE: 1 1/2" = 1'-0"

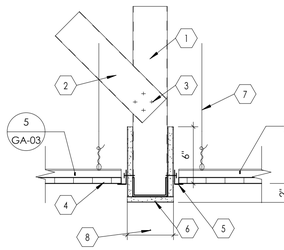

KEYED NOTES

1. METAL STUD FRAMING 3 5/8" X 18 GA STUDS, SUSPENDED FROM STRUCTURE ABOVE @ 16" O.C. SEE DETAIL **4 / GA-04**
2. 3-5/8" X 18 GA MTL. STUD LATERAL (45 DEGREE) BRACING AT 4'-0" O.C. CONNECT TO STRUCTURE ABOVE.
3. SHEET METAL SCREWS (4) #10.
4. ACOUSTICAL CEILING PANEL. SEE REFLECTED CEILING PLANS.
5. PERIMETER ANGLE MOLDING. SEE DETAIL **1 / GA-04**
6. 5/8" TYPE 'X' GYPSUM BOARD, TYP.
7. 12 GA. HANGER WIRES, TYP.
8. WIDTH MAY VARY. SEE PLANS.

3 Gypsum Board Header

SCALE: 1 1/2" = 1'-0"

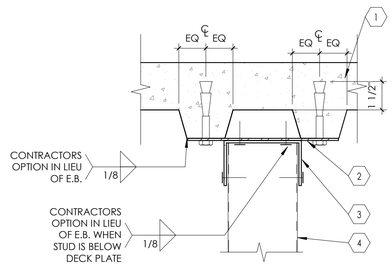

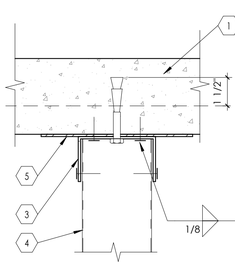

KEYED NOTES

1. CONCRETE OVER METAL DECK OR CONCRETE PAN & JOIST SYSTEM.
2. CONTINUOUS METAL PLATE 10 GA X 1'-4" WIDE WITH (2) 1/4" EXPANSION BOLTS.
3. LONG LEG TRACK 16 GA WITH (2) #12 S.M.S. @ 16" O.C.
4. METAL STUD, 18 GA MIN, 3-5/8" @ 4'-0" O.C.
5. PL WASHER 1/8" x 3" x 3"

4 Typical Suspended Stud Attachement To Concrete Deck

SCALE: 3" = 1'-0"

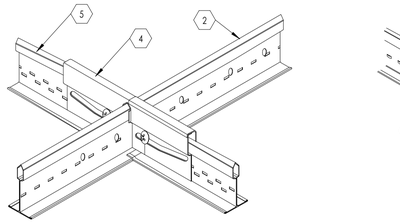

KEYED NOTES

1. 4"x15/16" EXPANSION SLEEVE. BASIS OF DESIGN: ARMSTRONG ES4, COLOR-WHITE.
2. MAIN BEAM. BASIS OF DESIGN: ARMSTRONG PRELUDE 15/16"XL EXPOSED TEE SYSTEM.
3. SEISMIC SEPARATION JOINT CLIP. BASIS OF DESIGN: ARMSTRONG SJMR-4"x1".
4. SEISMIC SEPARATION JOINT CLIP. BASIS OF DESIGN: ARMSTRONG SJCG-5"x1-1/2".
5. CROSS TEES. BASIS OF DESIGN: ARMSTRONG PRELUDE 15/16"XL EXPOSED TEE SYSTEM.

5 Siesmic Separation Joint Clip Detail

SCALE: 1 1/2" = 1'-0"

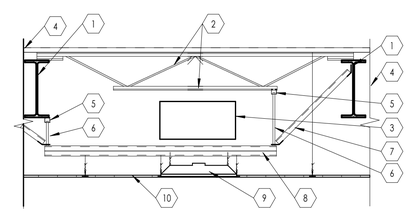

KEYED NOTES

1. STEEL BEAM AS OCCURS.
2. STEEL JOIST AS OCCURS.
3. MECHANICAL DUCTS. SEE MECHANICAL DRAWINGS
4. LINE OF WALL
5. UNISTRUT P1000, 6" LONG SUSPENDED FROM STRUCTURE ABOVE
6. THREADED ROD, 5/8" THICK. PROVIDE NUTS, WASHERS, CLAMPS, ETC. AS REQUIRED FOR COMPLETE INSTALLATION.
7. UNISTRUT, P1000, CROSS BRACE TO STRUCTURE. PROVIDE NUTS WASHERS CLAMPS ETC. AS REQUIRED FOR COMPLETE INSTALLATION.
8. UNISTRUT, P1001 @ 2'-0" O.C. SUSPENDED FROM STRUCTURE ABOVE
9. LIGHT FIXTURE SUSPENDED FROM UNISTRUT ONLY. DO NOT HANG FIXTURES FROM DUCTS.
10. CEILING SEE RCP FOR HEIGHT. SUSPEND CEILING GRID FROM UNISTRUT ONLY. CONTRACTOR SHALL NOT SUSPEND LIGHTS, GRIDS, ETC. FROM DUCTS.

NOTE:
CONTRACTOR SHALL PROVIDE UNISTRUTS AS INDICATED IN THIS DETAIL WHEREVER DUCT INTERFERES WITH CEILING SUSPENSION SYSTEM.

6 Suspended Ceiling Trapeze Detail

SCALE: 1/2" = 1'-0"

BOWEN COLLINS & ASSOCIATES
NJRA ARCHITECTS
5272 S. College Drive, Suite104
Murray, Utah 84123

STATE OF UTAH
SELVAM RAJAVELU
267857-0301
LICENSED ARCHITECT

NO.	DATE	REV. BY	DESCRIPTION
			REVISIONS

VERIFY SCALE
BAR IS ONE INCH
ORIGINAL DRAWING

South Valley Water Reclamation Facility
Lab Expansion and Remodel
7495 South 1300 West
West Jordan, Utah 84084

DESIGN
DESIGN
DRAWN
REVIEW
CHECKED
APPROVED

Details

DATE October 25, 2018
PROJECT NUMBER 17906.00

DRAWING NO.
GA-04

SHEET 29 OF 79

10/30/2018 1:45:29 PM

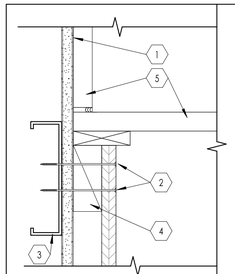

KEYED NOTES

1. FACE OF WALL ASSEMBLY
2. 2 #12 S.M.S. @ 16" O.C. MIN. AND 3" FROM EACH END
3. BACKING PLATE TYPE 1. FOR BACKING PLATE DETAIL SEE - **7 / GA-02**
4. SOLID BLOCKING TYP.
5. COUNTERTOP AND BACKSPLASH. SEE DETAIL **7 / GA-05**

1 Base Cabinet Anchorage - Top

SCALE: 3" = 1'-0"

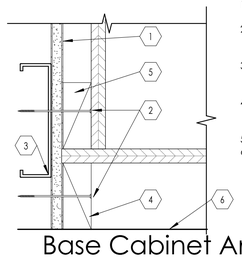

KEYED NOTES

1. FACE OF WALL ASSEMBLY
2. 2 #12 S.M.S. @ 16" O.C. MIN. AND 3" FROM EACH END
3. BACKING PLATE TYPE 1. FOR BACKING PLATE DETAIL SEE - **7 / GA-02**
4. PRESSURE TREATED CABINET BASE SUPPORT
5. SOLID BLOCKING
6. LINE OF FLOOR

2 Base Cabinet Anchorage - Bottom

SCALE: 3" = 1'-0"

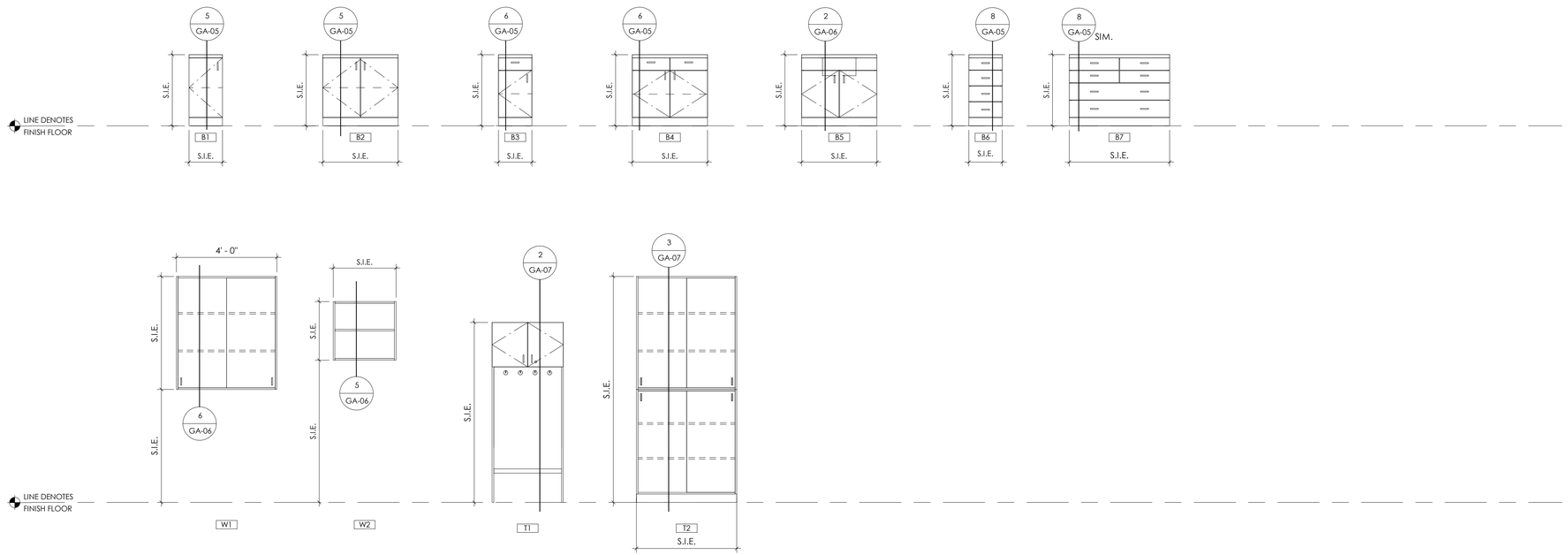

3 Cabinet Legend

(Note: See Interior Elevations (S.I.E.) for occurrence of cabinet types used in this project. Some cabinet type shown above may not be used in this project.)

SCALE: 3/8" = 1'-0"

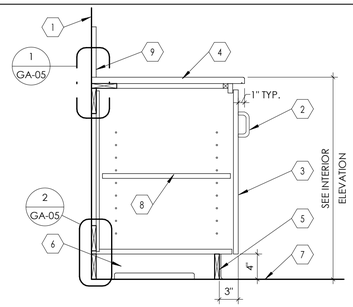

KEYED NOTES

1. LINE OF WALL, AS OCCURS. IF CABINET IS LOCATED AT AN ISLAND, PROVIDE WOOD BACK PANEL, WHERE EXPOSED. NO BACKSPLASH IS NECESSARY.
2. DOOR OR DRAWER PULL. SEE SPECIFICATIONS IN PROJECT MANUAL.
3. PLASTIC LAMINATE CABINET DOOR.
4. SCHEDULED COUNTERTOP WITH 1/4" MACHINED RADIUS EDGE. SEE DETAIL **7 / GA-05**. PROVIDE SOLID SURFACE END CAP AT ALL EXPOSED ENDS. SEE DETAIL **7 / GA-06**
5. WALL BASE. SEE FINISH SCHEDULE.
6. CABINET BASE. COORDINATE WITH ELECTRICAL DRAWINGS FOR POWER, DATA OUTLETS THAT ARE LOCATED HERE.
7. LINE OF FLOOR.
8. ADJUSTABLE SHELF. SEE ELEVATIONS FOR NUMBER OF ADJUSTABLE SHELVES REQUIRED. NOTCH SHELF 1/8" AT SUPPORTS TO PREVENT SLIDE OUT.
9. BACKSPLASH, 8" HIGH.

5 Base Cabinet with Door

SCALE: 1" = 1'-0"

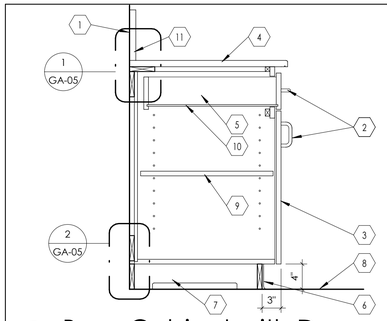

KEYED NOTES

1. LINE OF WALL, AS OCCURS. IF CABINET IS LOCATED AT AN ISLAND, PROVIDE WOOD BACK PANEL, WHERE EXPOSED. NO BACKSPLASH IS NECESSARY.
2. DOOR OR DRAWER PULL. SEE SPECIFICATIONS IN PROJECT MANUAL.
3. PLASTIC LAMINATE CABINET DOOR.
4. SCHEDULED COUNTERTOP WITH 1/4" MACHINED RADIUS EDGE. SEE DETAIL **7 / GA-05**. PROVIDE SOLID SURFACE END CAP AT ALL EXPOSED ENDS. SEE DETAIL **7 / GA-06**
5. DRAWER. SEE SPECIFICATIONS IN PROJECT MANUAL FOR TYPICAL DRAWER CONSTRUCTION.
6. WALL BASE. SEE FINISH SCHEDULE.
7. CABINET BASE. COORDINATE WITH ELECTRICAL DRAWINGS FOR POWER, DATA OUTLETS THAT ARE LOCATED HERE.
8. LINE OF FLOOR.
9. ADJUSTABLE SHELF. SEE ELEVATIONS FOR NUMBER OF ADJUSTABLE SHELVES REQUIRED. NOTCH SHELF 1/8" AT SUPPORTS TO PREVENT SLIDE OUT.
10. DRAWER BOTTOM PANEL. SEE SPECIFICATIONS IN PROJECT MANUAL FOR TYPICAL DRAWER CONSTRUCTION.
11. BACKSPLASH WITH 3/4" RADIUS EDGE.

6 Base Cabinet with Drawer and Door

SCALE: 1" = 1'-0"

KEYED NOTES

1. SIDE PANEL OF BASE CABINET, AS OCCURS.
2. SOLID SURFACE. CONTINUOUS COUNTERTOP & BACKSPLASH. AT SINK LOCATIONS ALSO PROVIDE AT LEAST 8" HIGH SIDE SPLASH, TYPICAL.

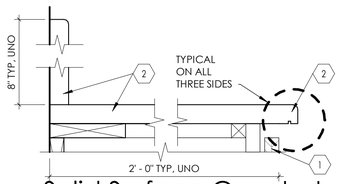

7 Solid Surface Countertop Detail

SCALE: 3" = 1'-0"

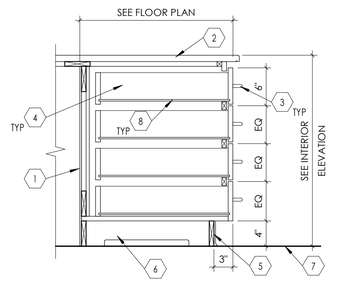

KEYED NOTES

1. SOLID BACK PANEL.
2. SCHEDULED COUNTERTOP WITH 1/4" MACHINED RADIUS EDGE. SEE DETAIL **7 / GA-05** PROVIDE SOLID SURFACE END CAP AT ALL EXPOSED ENDS. SEE DETAIL **7 / GA-06**
3. DRAWER PULL. SEE SPECIFICATIONS IN PROJECT MANUAL.
4. DRAWER. SEE SPECIFICATIONS IN PROJECT MANUAL FOR TYPICAL DRAWER CONSTRUCTION.
5. WALL BASE. SEE FINISH SCHEDULE.
6. CABINET BASE. COORDINATE WITH ELECTRICAL DRAWINGS FOR POWER, DATA OUTLETS THAT ARE LOCATED HERE.
7. LINE OF FLOOR.
8. DRAWER BOTTOM PANEL. SEE SPECIFICATIONS IN PROJECT MANUAL FOR TYPICAL DRAWER CONSTRUCTION.

8 Base Cabinet with Drawers

SCALE: 1" = 1'-0"

BOWEN COLLINS & ASSOCIATES
NJRA ARCHITECTS
5272 S. College Drive, Suite104
Murray, Utah 84123

STATE OF UTAH
SELVAM RAJAVELU
267857-0301
LICENSED ARCHITECT

NO.	DATE	REV. BY	DESCRIPTION

REVISIONS

VERIFY SCALE
BAR IS ONE INCH ORIGINAL DRAWING

South Valley Water Reclamation Facility
Lab Expansion and Remodel
7495 South 1300 West
West Jordan, Utah 84084

DESIGN: DESIGN | DRAWN | REVIEW: CHECKED | APPROVED

Cabinet Legend & Details

PROJECT NUMBER 17906.00
DATE October 25, 2018

DRAWING NO. GA-05
SHEET 30 OF 79

10/30/2018 1:45:31 PM

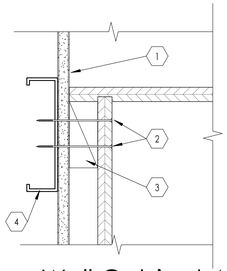

KEYED NOTES

1. FACE OF WALL ASSEMBLY
2. 2 #12 S.M.S. @ 16" O.C. MIN. AND 3" FROM EACH END.
3. BACKING PLATE TYPE 1. FOR BACKING PLATE DETAIL SEE - 7 / GA-02
4. SOLID BLOCKING TYP.

1 Wall Cabinet Anchorage - Top

SCALE: 3" = 1'-0"

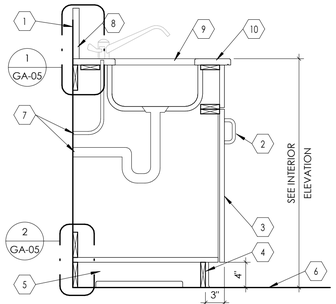

KEYED NOTES

1. LINE OF WALL, AS OCCURS. IF CABINET IS LOCATED AT AN ISLAND, PROVIDE WOOD BACK PANEL, WHERE EXPOSED. NO BACKSPLASH IS NECESSARY.
2. DOOR PULL. SEE SPECIFICATIONS IN PROJECT MANUAL.
3. PLASTIC LAMINATE CABINET DOOR.
4. WALL BASE. SEE FINISH SCHEDULE.
5. CABINET BASE. COORDINATE WITH ELECTRICAL DRAWINGS FOR POWER, DATA OUTLETS THAT ARE LOCATED HERE.
6. LINE OF FLOOR.
7. SEAL TIGHTLY AROUND PIPE PENETRATIONS WITH CAULKING. PROVIDE ESCUTCHEON PLATE AROUND DRAIN AND WATER LINES.
8. BACKSPLASH WITH 3/4" RADIUS EDGE.
9. UNDER COUNTER MOUNTED SINK. SEE PLUMBING DRAWINGS.
10. SCHEDULED FACED COUNTERTOP. SEE DETAILS 7 / GA-05 - USE EXTERIOR GRADE MARINE PLYWOOD, PHENOLIC RESIN, OR PARTICLE BOARD TYPE 2M2 WITHIN 2'-0" FROM SINK. PROVIDE SOLID SURFACE EDGE CAP AT ALL EXPOSED ENDS. SEE DETAIL 7 / GA-06

2 Base Cabinet with Sink

SCALE: 1" = 1'-0"

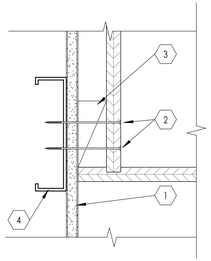

KEYED NOTES

1. FACE OF WALL ASSEMBLY
2. 2 #12 S.M.S. @ 16" O.C. MIN. AND 3" FROM EACH END.
3. BACKING PLATE TYPE 1. FOR BACKING PLATE DETAIL SEE - 7 / GA-02
4. SOLID BLOCKING TYP.

4 Wall Cabinet Anchorage - Bottom

SCALE: 3" = 1'-0"

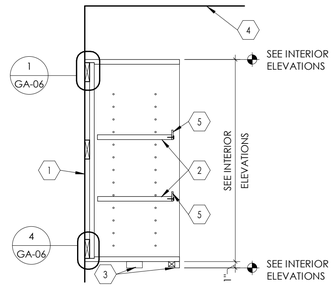

KEYED NOTES

1. LINE OF WALL.
2. ADJUSTABLE SHELF. SEE ELEVATIONS FOR NUMBER OF ADJUSTABLE SHELVES REQUIRED. NOTCH SHELF 1/8" AT SUPPORTS TO PREVENT SLIDE OUT.
3. PROVIDE WOOD FASCIA PANEL IN PLACES WHERE UNDER CABINET LIGHT OCCURS. SEE ELECTRICAL DRAWINGS FOR UNDER CABINET LIGHT FIXTURE LOCATIONS.
4. LINE OF CEILING. SEE REFLECTED CEILING PLAN.
5. EDGE PIECE, ALUMINUM, ATTACHED TO WOOD SHELVES.

NOTE: ALL EXPOSED SURFACES OF CABINET INTERIOR SHALL BE WOOD PER SPECIFICATION.

5 Wall Cabinet without Door

SCALE: 1" = 1'-0"

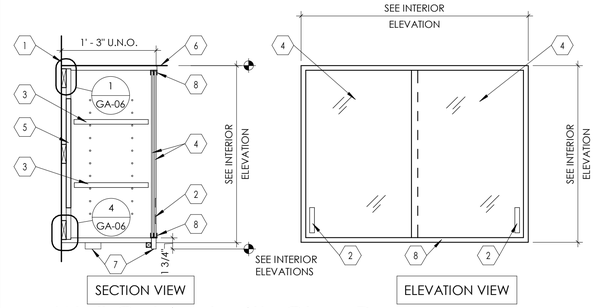

KEYED NOTES

1. LINE OF WALL.
2. DOOR PULL. SEE SPECIFICATIONS IN PROJECT MANUAL.
3. ADJUSTABLE SHELF. SEE ELEVATIONS FOR NUMBER OF ADJUSTABLE SHELVES REQUIRED. NOTCH SHELF 1/8" AT SUPPORTS TO PREVENT SLIDE OUT.
4. PROVIDE 1/4" THICK TEMPERED GLASS.
5. OPENING IN BACK PANEL FOR CABLE ACCESS. FIELD VERIFY REQUIRED OPENING SIZE BASED ON LOCATION OF DATA & POWER OUTLETS RECESSED IN THE WALL.
6. LINE OF CEILING.
7. PROVIDE WOOD FASCIA PANEL IN PLACES WHERE UNDER CABINET LIGHT OCCURS. SEE ELECTRICAL DRAWINGS FOR UNDER CABINET LIGHT FIXTURE LOCATIONS.
8. ALUMINUM SLIDING TRACK FOR GLASS PANEL.

6 Wall Cabinet with Glass Door

SCALE: 1" = 1'-0"

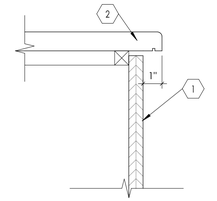

KEYED NOTES

1. FACE OF NEW DRAWER OR DOOR OR SIDE PANEL OF BASE CABINET, AS OCCURS.
2. SOLID SURFACE EDGE SHALL BE CONTINUOUS AT COUNTERTOP. PROVIDE CONT. DRIP EDGE AS SHOWN.

7 Countertop Side Edge

SCALE: 3" = 1'-0"

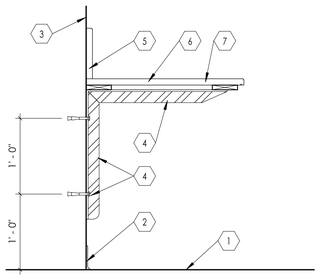

KEYED NOTES

1. LINE OF FLOOR.
2. WALL BASE. SEE FINISH SCHEDULE.
3. LINE OF MASONRY OR CONCRETE WALL AS OCCURS.
4. COUNTERTOP SUPPORT, PAINTED. SUPPORT SHALL BE STEEL ANGLE, 2"X2"X1/4", PIECES MITERED AND WELDED @ 90° ANGLE AS INDICATED CHAMFER EXPOSED EDGE (BELOW COUNTERTOP EDGE) AND GRIND ALL EXPOSED EDGES SMOOTH. ATTACH SUPPORT TO MASONRY OR CONCRETE WALL WITH 3/8" EPOXY BOLTS, AS SHOWN. SUPPORTS SHALL BE LOCATED VERTICALLY ON WALL AT 3'-0" O.C. MAXIMUM.
5. BACKSPLASH WITH 3/4" RADIUS EDGE.
6. PROVIDE GROMMETS AT COMPUTER MONITOR LOCATIONS, KNEE SPACES, COUNTERTOP EQUIPMENT, ETC.
7. SCHEDULED COUNTERTOP WITH 1/4" MACHINED RADIUS EDGE. SEE DETAILS 7 / GA-05. PROVIDE SOLID SURFACE END CAP AT ALL EXPOSED ENDS. SEE DETAIL 7 / GA-06

8 Typical Countertop with Steel Support at Masonry & Concrete Walls

SCALE: 1" = 1'-0"

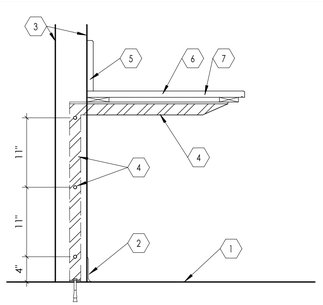

KEYED NOTES

1. LINE OF FLOOR.
2. WALL BASE. SEE FINISH SCHEDULE.
3. WALL. SEE FLOOR PLAN & WALL TYPES.
4. COUNTERTOP SUPPORT, PAINTED. SUPPORT SHALL BE STEEL ANGLE, 2"X2"X1/4", PIECES MITERED AND WELDED @ 90° ANGLE AS INDICATED. CHAMFER EXPOSED EDGES SMOOTH. ATTACH SUPPORT TO METAL STUDS INSIDE WALL WITH 1/4" BOLTS, AS SHOWN. AT FLOOR, PROVIDE 3" WIDE X 6" LONG X 1/4" THICK, BASE STEEL PLATE WELDED TO VERTICAL STEEL ANGLE, ATTACH BASE PLATE TO FLOOR WITH TWO 1/2" DIAMETER ANCHOR BOLTS (ON EITHER SIDE OF THE VERTICAL ANGLE) WITH 3" MINIMUM EMBED IN CONCRETE FLOOR. CONTRACTOR SHALL REVIEW INTERIOR ELEVATIONS AND LOCATE SUPPORTS DURING WALL CONSTRUCTION. SUPPORT SPACING SHALL NOT EXCEED 3'-0" O.C. MAXIMUM.
5. BACKSPLASH WITH 1/4" RADIUS EDGE.
6. PROVIDE GROMMETS WHERE SHOWN ON PLANS.
7. SCHEDULED COUNTERTOP WITH 1/4" MACHINED RADIUS EDGE, SEE DETAIL 7 / GA-05, PROVIDE SOLID SURFACE END CAP AT ALL EXPOSED ENDS. SEE DETAIL 7 / GA-06

9 Typical Countertop with Steel Support at Stud Walls

SCALE: 1" = 1'-0"

BOWEN COLLINS & ASSOCIATES
NJRA ARCHITECTS
5272 S. College Drive, Suite104
Murray, Utah 84123

STATE OF UTAH
SELVAM RAJAVELU
267857-0301
LICENSED ARCHITECT

NO.	DATE	REV. BY	DESCRIPTION
			REVISIONS

VERIFY SCALE
BAR IS ONE INCH
ORIGINAL DRAWING

South Valley Water Reclamation Facility
Lab Expansion and Remodel
7495 South 1300 West
West Jordan, Utah 84084

DESIGN | REVIEW | CHECKED | APPROVED | DESIGN | DRAWN

Details

DATE October 25, 2018
PROJECT NUMBER 17906.00

DRAWING NO. GA-06

SHEET 31 OF 79

10/30/2018 1:45:32 PM

KEYED NOTES

1. LINE OF WALL

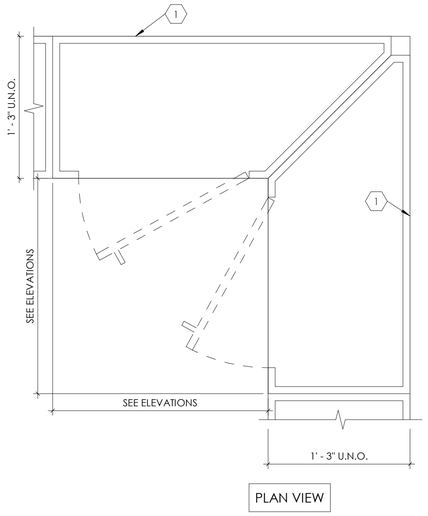

1 Corner Cabinet Plan View

SCALE: 1 1/2" = 1'-0"

KEYED NOTES

1. LINE OF WALL.
2. WALL BASE. SEE FINISH SCHEDULE.
3. LINE OF FLOOR.
4. FIXED SHELF.
5. COAT HOOK.
6. PLASTIC LAMINATE CABINET DOOR.
7. NEW FLOORING TO EXTEND INTO CABINET.
8. WOOD TRIM, 3/4" X 4".
9. FINISHED WOOD BACK PANEL.
10. SHELF SUPPORT BEYOND.
11. FINISH WOOD TRIM.

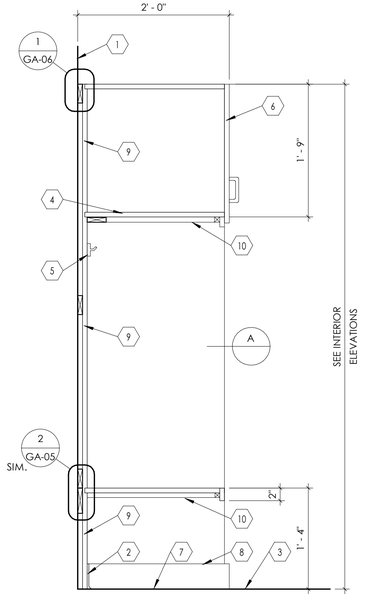

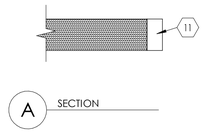

2 Tall Cabinet with Hooks and Shelf

SCALE: 1" = 1'-0"

KEYED NOTES

1. LINE OF WALL.
2. DOOR PULL. SEE SPECIFICATIONS IN PROJECT MANUAL.
3. GLASS CABINET DOOR, 1/4" THICK, TEMPERED.
4. WALL BASE. SEE FINISH SCHEDULE.
5. CABINET BASE. COORDINATE WITH ELECTRICAL DRAWINGS FOR POWER AND DATA OUTLETS THAT ARE LOCATED HERE.
6. LINE OF FLOOR.
7. ADJUSTABLE SHELVING, 5/8" WOOD. SEE INTERIOR ELEVATION FOR NUMBER OF SHELVES REQUIRED.
8. FIXED SHELF, 1" WOOD.
9. ALUMINUM SLIDING TRACK FOR GLASS PANEL.
10. FINISHED WOOD BACK AND SIDE PANELS.
11. WOOD CABINET FACE.
12. SHELF SUPPORT BEYOND.

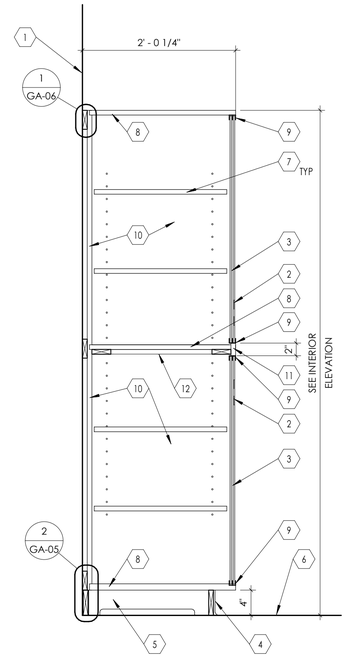

3 Tall Cabinet with Glass Doors

SCALE: 1" = 1'-0"

KEYED NOTES

1. METAL TRACK, 20 GA, TYP.
2. METAL STUDS, 20 GA.
3. METAL STUDS, 16GA.

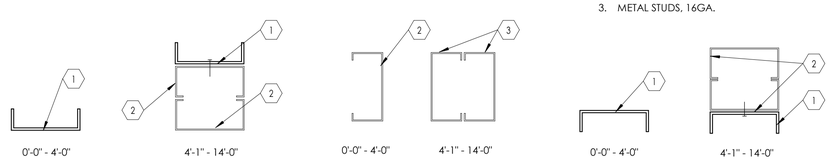

4 Typical Duct Opening

SCALE: 3" = 1'-0"

KEYED NOTES

1. METAL TRACK, 18 GA
2. METAL STUDS, 18 GA
3. METAL TRACK, 16 GA
4. METAL STUDS, 16 GA
5. 6" METAL STUDS, 14 GA
6. METAL TRACK, 14 GA

NOTE: ALL FASTENERS TO BE #12 SMS @ 2'-0" O.C. TYP., U.N.O.

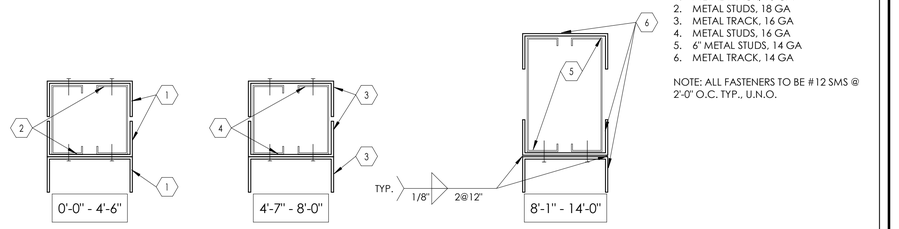

5 Typical Window Opening Framing at Sill

SCALE: 3" = 1'-0"

BOWEN COLLINS & ASSOCIATES

NJRA ARCHITECTS

5272 S. College Drive, Suite104
Murray, Utah 84123

STATE OF UTAH
SELVAM RAJAVELU
267857-0301
LICENSED ARCHITECT

NO.	DATE	REV. BY	DESCRIPTION
			REVISIONS

VERIFY SCALE
BAR IS ONE INCH
ORIGINAL DRAWING

South Valley Water Reclamation Facility
Lab Expansion and Remodel
7495 South 1300 West
West Jordan, Utah 84084

DESIGN
REVIEW
CHECKED
APPROVED
DESIGN
DRAWN

Details

DATE October 25, 2018
PROJECT NUMBER 17906.00

DRAWING NO. GA-07

SHEET 32 OF 79

10/30/2018 1:45:33 PM

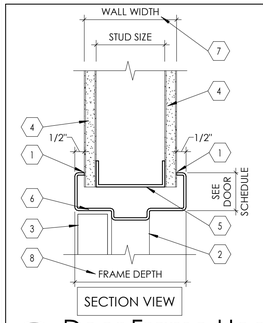

KEYED NOTES

1. CONTINUOUS SEALANT ON BOTH SIDES OF THE FRAME.
2. DOOR FRAME SEEN BEYOND.
3. DOOR, SEE DOOR SCHEDULE FOR DOOR TYPE.
4. GYPSUM BOARD, 5/8" THICK, (USE TYPE 'X' IF WALLS ARE FIRE RATED) ATTACH TO METAL STUDS. SEE WALL TYPES.
5. STEEL RUNNER (18 GAUGE) FASTENED WITH SCREWS TO STRUT STUDS AT EACH END.
6. HOLLOW METAL DOOR FRAME. FRAME THICKNESS VARIES WITH WALL THICKNESS. SEE FLOOR PLAN AND WALL SECTIONS. PAINT FRAME.
7. SEE WALL TYPES FOR WALL WIDTH AND STUD SIZE.
8. FRAME DEPTH SHALL BE WALL WIDTH PLUS 1".

1 Door Frame Head Detail

SCALE: 3" = 1'-0"

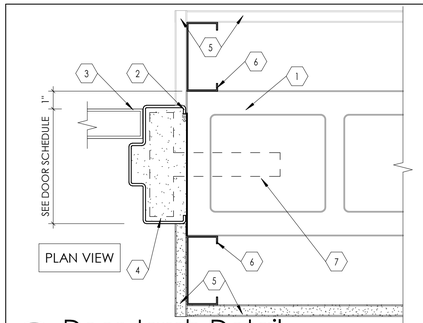

KEYED NOTES

1. STRUCTURAL CMU WALL.
2. CONTINUOUS SEALANT ON BOTH SIDES OF FRAME, AT BUILDING EXTERIOR SIDE USE CAULKING WITH BACKER ROD. VERIFY CAULKING COLOR WITH ARCHITECT.
3. DOOR. SEE DOOR SCHEDULE FOR DOOR TYPE.
4. HOLLOW METAL DOOR FRAME (OR WINDOW FRAME WHERE OCCURS). ATTACH FRAME TO WALL WITH MASONRY ANCHORS (3 PER JAMB MINIMUM) AS RECOMMENDED BY FRAME MANUFACTURER. FILL FRAME WITH GROUT. PAINT FRAME.
5. GYPSUM BOARD, AS OCCURS. SEE WALL TYPES FOR WALL CONSTRUCTION.
6. METAL STUD FRAMING, AS OCCURS. SEE WALL TYPES FOR WALL CONSTRUCTION.
7. FRAME ANCHOR.

NOTE:
FOR DOOR 102A, ALL WALL ELEMENTS ARE EXISTING.

2 Door Jamb Detail

SCALE: 3" = 1'-0"

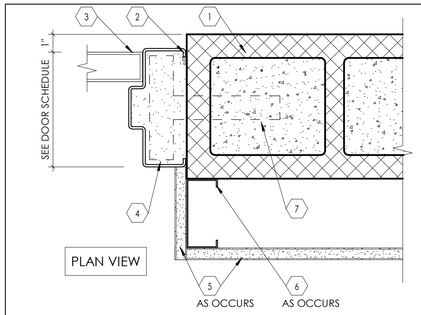

KEYED NOTES

1. STRUCTURAL CMU WALL.
2. CONTINUOUS SEALANT ON BOTH SIDES OF FRAME. AT BUILDING EXTERIOR SIDE USE CAULKING WITH BACKER ROD. VERIFY CAULKING COLOR WITH ARCHITECT.
3. DOOR. SEE DOOR SCHEDULE FOR DOOR TYPE.
4. HOLLOW METAL DOOR FRAME (OR WINDOW FRAME WHERE OCCURS). ATTACH FRAME TO WALL WITH MASONRY ANCHORS (3 PER JAMB MINIMUM) AS RECOMMENDED BY FRAME MANUFACTURER. FILL FRAME WITH GROUT. PAINT FRAME.
5. GYPSUM BOARD. SEE WALL TYPES FOR WALL CONSTRUCTION.
6. METAL STUD FRAMING. SEE WALL TYPES FOR WALL CONSTRUCTION.
7. FRAME ANCHOR.

3 Door Jamb Detail

SCALE: 3" = 1'-0"

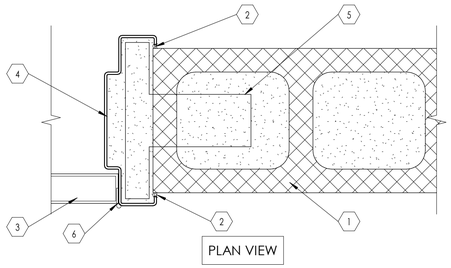

KEYED NOTES

1. CMU WALL. SEE FLOOR PLAN FOR WALL THICKNESS.
2. CONTINUOUS SEALANT ON BOTH SIDES OF FRAME. AT BUILDING EXTERIOR SIDE USE CAULKING WITH BACKER ROD. VERIFY CAULKING COLOR WITH ARCHITECT.
3. DOOR. SEE DOOR SCHEDULE FOR DOOR TYPE.
4. HOLLOW METAL DOOR FRAME (OR WINDOW FRAME WHERE OCCURS). ATTACH FRAME TO WALL WITH MASONRY ANCHORS (3 PER JAMB MINIMUM) AS RECOMMENDED BY FRAME MANUFACTURER. FILL FRAME WITH GROUT. PAINT FRAME.
5. FRAME ANCHOR
6. HINGE AS OCCURS. SEE DOOR SCHEDULE AND FLOOR PLAN FOR DOOR SWING.

4 Door Jamb Detail

SCALE: 3" = 1'-0"

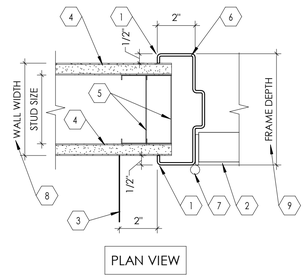

KEYED NOTES

1. CONTINUOUS SEALANT ON BOTH SIDES OF THE FRAME.
2. DOOR. SEE DOOR SCHEDULE FOR DOOR TYPE.
3. LINE OF WALL AS OCCURS.
4. GYPSUM BOARD, 5/8" THICK, (USE TYPE 'X' IF WALLS ARE FIRE RATED) ATTACHED TO METAL STUD FRAMING, SEE WALL TYPES.
5. PROVIDE DOUBLE METAL STUDS AT FRAME JAMBS, WALL ENDS, ETC. PROVIDE STEEL STRAPS (6" HIGH 16 GAUGE STRAPS AT 2'-0" O.C.)
6. HOLLOW METAL DOOR FRAME. FRAME THICKNESS VARIES WITH WALL THICKNESS. SEE FLOOR PLAN AND WALL SECTIONS. PAINT FRAME.
7. DOOR HINGE AS OCCURS. SEE DOOR AND HARDWARE SCHEDULE. SEE FLOOR PLAN FOR DOOR SWING.
8. SEE WALL TYPES FOR WALL WIDTH AND STUD SIZE.
9. FRAME DEPTH SHALL BE WALL WIDTH PLUS 1".

5 Door Frame Jamb Detail

SCALE: 3" = 1'-0"

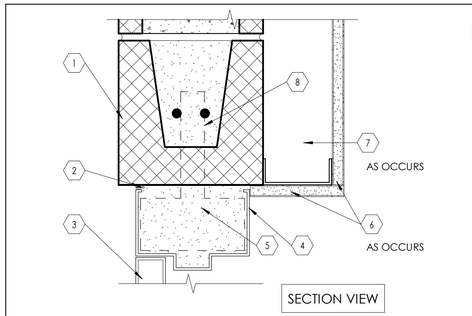

KEYED NOTES

1. STRUCTURAL CMU WALL.
2. CONTINUOUS SEALANT AT BUILDING EXTERIOR SIDE USE CAULKING WITH BACKER ROD. VERIFY CAULKING COLOR WITH ARCHITECT.
3. DOOR. SEE DOOR SCHEDULE FOR DOOR TYPE.
4. HOLLOW METAL DOOR FRAME (OR WINDOW FRAME WHERE OCCURS). ATTACH FRAME TO WALL WITH MASONRY ANCHORS (3 PER JAMB MINIMUM
5. AS RECOMMENDED BY FRAME MANUFACTURER. FILL FRAME WITH GROUT. PAINT FRAME.
6. GYPSUM BOARD. SEE WALL TYPES FOR WALL CONSTRUCTION.
7. METAL STUD FRAMING. SEE WALL TYPES FOR WALL CONSTRUCTION.
8. FRAME ANCHOR.

6 Door Frame Head Detail

SCALE: 3" = 1'-0"

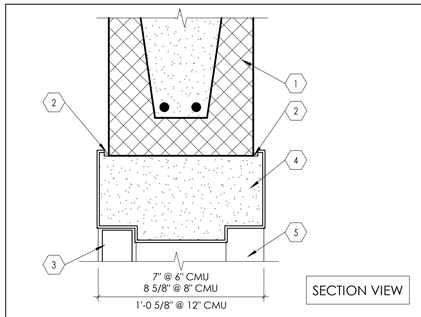

KEYED NOTES

1. CMU WALL, SEE FLOOR PLAN FOR WALL THICKNESS.
2. CONTINUOUS SEALANT ON BOTH SIDES OF FRAME. AT BUILDING EXTERIOR SIDE USE CAULKING WITH BACKER ROD. VERIFY CAULKING COLOR WITH ARCHITECT.
3. DOOR. SEE DOOR SCHEDULE FOR DOOR TYPE.
4. HOLLOW METAL DOOR FRAME (OR WINDOW FRAME WHERE OCCURS). AS RECOMMENDED BY FRAME MANUFACTURER. FILL FRAME WITH GROUT. PAINT FRAME.
5. FRAME SEEN BEYOND.

7 Door Frame Head Detail on CMU

SCALE: 3" = 1'-0"

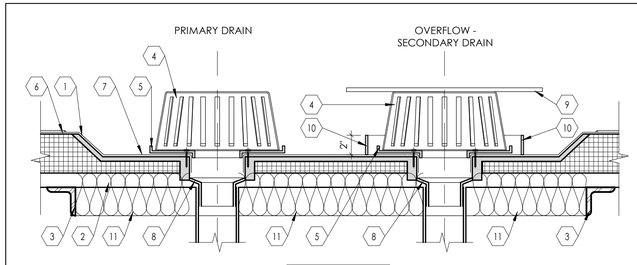

KEYED NOTES

1. SEE WALL SECTION SHEETS FOR ROOF CONSTRUCTION.
2. ROOF DECK. SEE STRUCTURAL DRAWINGS.
3. STEEL ANGLE TO FRAME AROUND OPENINGS. SEE STRUCTURAL DRAWINGS.
4. METAL STRAINER. SEE PLUMBING DRAWINGS.
5. METAL CLAMPING RING. SEE PLUMBING DRAWINGS.
6. ROOF MEMBRANE FEATHERED AT FIELD OF ROOF.
7. ROOF MEMBRANE.
8. DRAIN BOWL WITH REQUIRED DECK CLAMP. SEE MECHANICAL DRAWINGS.
9. SHEET METAL PLATE, GALVANIZED 16 GAUGE PLATE WITH ROUNDED EDGES, ATTACHED TO METAL STRAINER. EDGES SHALL EXTEND 2" BEYOND THE DRAIN BOWL. SEE PLUMBING DRAWINGS.
10. METAL OVERFLOW COLLAR, 2" HIGH, AT ALL SECONDARY DRAINS.
11. PROVIDE BATT INSULATION IN ALL AREAS WHERE ROOF INSULATION TAPERS FOR ROOF DRAIN ASSEMBLY.

8 Roof Drain Section

SCALE: 1 1/2" = 1'-0"

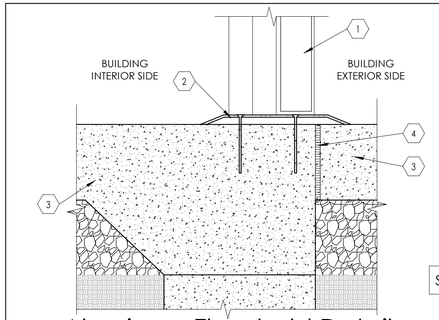

KEYED NOTES

1. HOLLOW METAL DOOR. SEE DOOR SCHEDULE.
2. ALUMINUM THRESHOLD. MOUNT THRESHOLD TO SLAB WITH APPROPRIATE CONCRETE FASTENERS AND EPOXY TYPE ADHESIVES. MAINTAIN 1" MINIMUM DIMENSION BETWEEN THE THRESHOLD EDGE AND THE COLD JOINT BETWEEN THE CONCRETE FLOOR AND THE SIDEWALK SLAB. PROVIDE CONTINUOUS CLEAR SEALANT ALONG ALL EXPOSED EDGES OF THE THRESHOLD.
3. CONCRETE SLAB ON GRADE. SEE FLOOR PLAN AND SITE PLAN.
4. MINERAL FIBER EXPANSION MATERIAL.

9 Aluminum Threshold Detail

SCALE: 3" = 1'-0"

BOWEN COLLINS & ASSOCIATES
NJRA ARCHITECTS
5272 S. College Drive, Suite104
Murray, Utah 84123
STATE OF UTAH
SELVAM RAJAVELU
267857-0301
LICENSED ARCHITECT

NO.	DATE	REV. BY	DESCRIPTION
			REVISIONS

VERIFY SCALE
BAR IS ONE INCH
ORIGINAL DRAWING

South Valley Water Reclamation Facility
Lab Expansion and Remodel
7495 South 1300 West
West Jordan, Utah 84084

DESIGN | REVIEW | CHECKED | APPROVED | DESIGN | DRAWN

Details

DATE October 25, 2018
PROJECT NUMBER 17906.00

DRAWING NO. GA-08
SHEET 33 OF 79

10/30/2018 1:45:35 PM

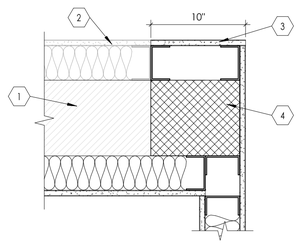

KEYED NOTES

1. EXISTING CMU WALL.
2. EXISTING FURRING WALL.
3. NEW WALL STRUCTURE. ALINE FINISH WITH EXISTING WALL. SEE FINISH SCHEDULE.
4. NEW CMU INFILL.

1 Existing Window Opening Infill Detail

SCALE: 1 1/2" = 1'-0"

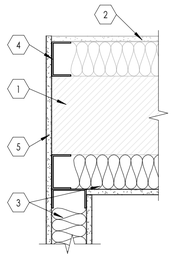

KEYED NOTES

1. EXISTING CMU WALL.
2. EXISTING FURRING WALL.
3. NEW WALL STRUCTURE. ALINE FINISH WITH EXISTING WALL. SEE FINISH SCHEDULE.
4. NEW STUD TO MATCH EXISTING STUDS IN THE WALL.
5. GYPSUM BOARD TO COVER EXPOSED CMU.

2 Detail at Existing Window

SCALE: 1 1/2" = 1'-0"

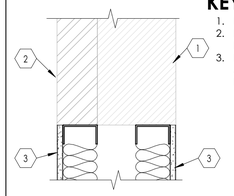

KEYED NOTES

1. EXISTING LOBBY WALL TO REMAIN.
2. EXISTING FURRING WALL TO REMAIN.
3. NEW WINDOW INFILL FRAMING - ALIGN NEW GYP. BD. W/ EXIST. FINISHES. SEE FINISH SCHEDULE.

3 Lobby Window Infill Detail

SCALE: 1 1/2" = 1'-0"

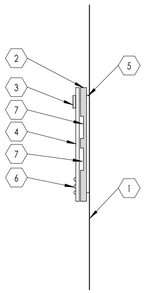

KEYED NOTES

1. LINE OF WALL.
2. MATTE FINISHED, OPAQUE ACRYLIC SHEET BASE PANEL ATTACHED TO SHIM PLATE.
3. ROOM NUMBER (1/32" RAISED TEXT CHARACTERS, HELVETICA FONT, MATTE FINISHED OPAQUE ACRYLIC SHEET) ATTACHED TO FRONT PANEL.
4. MATTE FINISHED OPAQUE ACRYLIC FRONT PANEL (WITH TRANSPARENT WINDOW) ATTACHED TO BASE PANEL.
5. CONCEALED ALUMINUM SHIM PLATE, 1/8" THICK, WITH PRE-DRILLED HOLES FOR COUNTERSUNK FASTENERS. USE APPROPRIATE FASTENERS DEPENDING ON THE SUBSTRATE.
6. BRAILLE CHARACTERS AS PER. ADA (AMERICANS WITH DISABILITIES ACT) REQUIREMENTS DENOTING ROOM NUMBER AND NAME.
7. RECESS 1/16" FOR TEXT INSERT. FOR SIGN "TYPE - S1" ONLY.

NOTE:
TYPE "S1" SIGN SHOWN. MOUNTING FOR OTHER SIGN TYPES SHALL BE SIMILAR.

4 Sign Mounting Detail

SCALE: 3" = 1'-0"

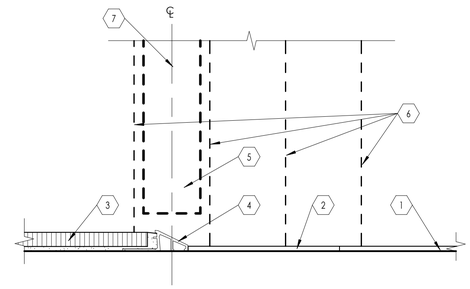

KEYED NOTES

1. LINE OF FLOOR.
2. CARPET. SEE FINISH SCHEDULE.
3. MEDIUM SET TILE FLOOR. SEE FINISH SCHEDULE.
4. METAL EDGE STRIP. SCHLUTER RENO SERIES OR EQUAL.
5. DOOR AS OCCURS. SEE DOOR SCHEDULE.
6. DOOR FRAME AS OCCURS. SEE DOOR SCHEDULE.
7. CENTERLINE OF DOOR AND METAL EDGE STRIP.

5 Floor Transition - Tile to Carpet

SCALE: 6" = 1'-0"

KEYED NOTES

1. SIGNAGE, O.F.O.I.
2. SIGN AT ALL ACCESSIBLE LOCATIONS, O.F.O.I.
3. DOOR FRAME. SEE DOOR SCHEDULE.
4. DOOR. SEE DOOR SCHEDULE.
5. OPENING IN WALL.
6. LINE OF FLOOR.

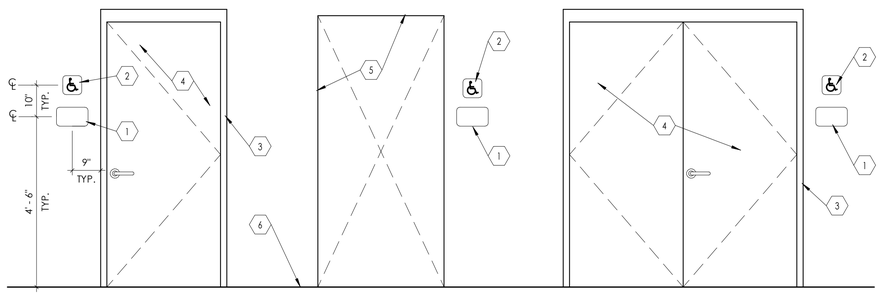

7 Sign Mounting Elevation

SCALE: 1/2" = 1'-0"

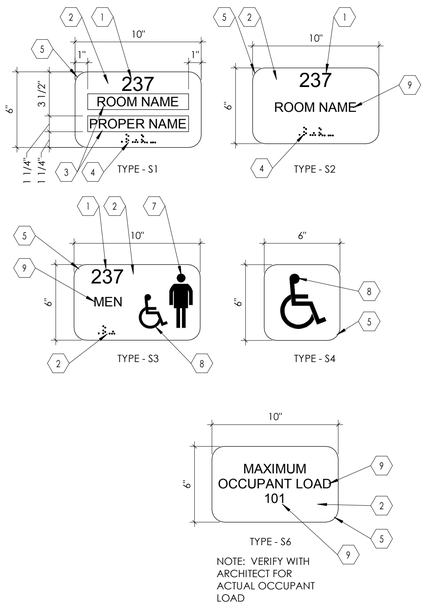

KEYED NOTES

1. ROOM NUMBER (1/32" RAISED TEXT CHARACTERS, HELVETICA FONT, MATTE FINISHED OPAQUE ACRYLIC SHEET) ATTACHED TO FRONT PANEL.
2. MATTE FINISHED OPAQUE ACRYLIC FRONT PANEL (WITH TRANSPARENT WINDOW) ATTACHED TO BASE PANEL.
3. TRANSPARENT WINDOW FOR TEXT INSERT (HELVETICA FONT). TEXT INSERT SHALL BE FURNISHED AND INSTALLED BY SIGN CONTRACTOR.
4. BRAILLE CHARACTERS AS PER ADA (AMERICANS WITH DISABILITIES ACT) REQUIREMENTS DENOTING ROOM NUMBER AND NAME.
5. RADIUS CORNER, 1" TYPICAL.
6. MATTE FINISHED OPAQUE ACRYLIC FRONT PANEL ATTACHED TO BASE PANEL.
7. PROVIDE APPROPRIATE SYMBOL FOR MEN, WOMEN, UNISEX, BOYS AND GIRLS TOILET ROOM AS OCCURS.
8. PROVIDE APPROPRIATE SYMBOL FOR STAIR, DISABLED SIGN, ETC. AS INDICATED.
9. ROOM NAME (1/32" RAISED TEXT CHARACTERS, HELVETICA FONT, MATTE FINISHED OPAQUE ACRYLIC SHEET) ATTACHED TO FRONT PANEL.
10. PROVIDE DISABLED SYMBOL AS INDICATED IN THE SIGN FOR ALL ROOMS THAT ARE WHEEL CHAIR ACCESSIBLE.

NOTE:
A. PROVIDE ROOM SIGN AT EACH DOORWAY OR A WALL OPENING LEADING TO A ROOM. SEE FINISH FLOOR PLAN FOR REQUIRED NUMBER OF SIGNS, SIGN TYPE, ROOM NAMES, ETC.
B. SIGN CONTRACTOR SHALL COORDINATE WITH OWNER AND PROVIDE TEXT INSERTS FOR OCCUPANTS PROPER NAME FOR ALL "TYPE-S1" WALL SIGNS.
C. ALL COLORS SHALL BE SELECTED BY ARCHITECT AND MOUNTED ON WALL OR DOOR PER DETAIL **4 / GA-09**

8 Room Signage Detail

SCALE: 2" = 1'-0"

KEYED NOTES

1. GYPSUM BOARD, 5/8" THICK. (USE TYPE 'X' IF WALLS ARE FIRE RATED) ATTACHED TO METAL STUD.
2. FIRE EXTINGUISHER CABINET, SEMI RECESSED. VERIFY WITH MANUFACTURER FOR ROUGH OPENING SIZE REQUIREMENTS.
3. HAND HELD FIRE EXTINGUISHER.
4. CABINET DOOR.
5. COVER ALL SIDES OF CABINET WITH 5/8" THICK, TYPE 'X' GYPSUM BOARD.

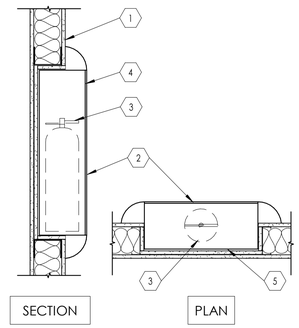

AT GYPSUM BOARD WALL

FIRE EXTINGUISHER RECESSED CABINET AT GYPSUM BOARD WALL

9 Fire Extinguisher Cabinet Detail

SCALE: 1" = 1'-0"

BOWEN COLLINS & ASSOCIATES
NJRA ARCHITECTS
5272 S. College Drive, Suite104
Murray, Utah 84123

STATE OF UTAH
SELVAM RAJAVELU
267857-0301
LICENSED ARCHITECT

NO.	DATE	REV. BY	DESCRIPTION

REVISIONS

VERIFY SCALE
BAR IS ONE INCH
ORIGINAL DRAWING

South Valley Water Reclamation Facility
Lab Expansion and Remodel
7495 South 1300 West
West Jordan, Utah 84084

DESIGN | REVIEW
DESIGN | DRAWN | CHECKED | APPROVED

Details

DATE: October 25, 2018
PROJECT NUMBER: 17906.00

DRAWING NO. GA-09

SHEET 34 OF 79

10/30/2018 1:45:36 PM

GENERAL STRUCTURAL NOTES

GENERAL

1. THE SPECIFICATIONS AND REQUIREMENTS INDICATED ON THIS SHEET ARE INTENDED AS A BASIC SUMMARY OF THE MATERIAL CONSTRUCTION AND INSPECTION REQUIREMENTS FOR THIS PROJECT. ADDITIONAL REQUIREMENTS ARE GIVEN IN THE PROJECT SPECIFICATIONS. IN THE EVENT OF A CONFLICT BETWEEN THESE GENERAL NOTES AND THE REQUIREMENTS GIVEN IN THE PROJECT SPECIFICATIONS, THE ENGINEER SHALL BE CONTACTED TO DETERMINE WHICH PROVISION GOVERNS.
2. FOR LOCATION AND DIMENSIONS OF SLEEVES, CURBS, OPENINGS, AND DEPRESSIONS NOT SHOWN ON THE STRUCTURAL DRAWINGS, SEE ARCHITECTURAL, CIVIL, MECHANICAL, AND ELECTRICAL DRAWINGS. THE CONTRACTOR SHALL VERIFY AND COORDINATE PENETRATIONS SHOWN ON THE OTHER PROJECT DRAWINGS, WHETHER THEY ARE SHOWN ON THE STRUCTURAL DRAWINGS OR NOT.
3. EMBEDDED ITEMS, SUCH AS PIPE SLEEVES, CONDUITS, AND INSERTS SHALL ALL BE RIGIDLY INSTALLED IN PLACE BEFORE CONCRETE IS POURED. SEE ARCHITECTURAL, CIVIL, MECHANICAL, AND ELECTRICAL DRAWINGS FOR ITEMS REQUIRING SLEEVES AND EMBEDMENTS IN CONCRETE, WHICH ARE NOT SHOWN ON THE STRUCTURAL DRAWINGS.
4. NO STRUCTURAL MEMBER SHALL BE CUT FOR PIPES, DUCTS, ETC. UNLESS SPECIFICALLY DETAILED OR APPROVED IN WRITING BY THE ENGINEER.
5. DESIGN DETAILS AS SHOWN ON THE DRAWINGS ARE INTENDED TO BE TYPICAL AND APPLY TO ALL SIMILAR SITUATIONS OCCURRING ON THE PROJECT, WHETHER OR NOT THEY ARE SPECIFICALLY REFERENCED IN EACH LOCATION. CONSULT THE ENGINEER FOR CONCURRENCE PRIOR TO CONSTRUCTION.
6. SUBMIT DRAWINGS AND RECEIVE REVIEW OF ALL STRUCTURAL RELATED SHOP DRAWINGS PRIOR TO ERECTION OR CONSTRUCTION.
7. APPLICABLE BUILDING CODE FOR THE PROJECT IS THE 2015 EDITION OF THE INTERNATIONAL BUILDING CODE (IBC).

SITE PREPARATION NOTES

1. SITE PREPARATION NOTES FOR THIS PROJECT ARE BASED ON RECOMMENDATIONS CONTAINED IN A SOILS REPORT BY WESTERN TECHNOLOGIES, INC., DATED DECEMBER 11, 2007, ALONG WITH ANY ADDENDA THERETO, WHICH HAVE BEEN PREPARED FOR THIS PROJECT. A REFERENCE COPY IS AVAILABLE UPON REQUEST FROM THE ARCHITECT. FOOTINGS AND FOUNDATIONS AS SHOWN ON DRAWINGS MAY VARY IF THE SUBSURFACE SOIL CONDITIONS VARY FROM THOSE FOUND IN THE SOILS REPORT.
2. ALL SURFACE MATERIALS SUCH AS VEGETATION (INCLUDING THE ROOT ZONE), TOPSOIL, DEBRIS, NON-ENGINEERED FILL, BOULDERS LARGER THAN 12" AND ANY OTHER DELETERIOUS MATERIALS SHALL BE REMOVED FROM FIVE FEET BEYOND THE BUILDING PERIMETER. THE DEPTH OF EXCAVATION SHALL EXTEND TO TWO FEET BELOW ALL FOOTINGS AND SLABS ON GRADE.
3. THE EXPOSED SUBGRADE SHALL BE SCARIFIED, MOISTURE CONDITIONED AND RECOMPACTED TO A MINIMUN DEPTH OF 12 INCHES. ALL SOFT SPOTS SHALL BE REMOVED AND REPLACED WITH COMPACTED STRUCTURAL FILL OR OTHERWISE STABILIZED.
4. FOOTINGS SHALL BEAR UPON A MINIMUM OF TWO FEET OF COMPACTED STRUCTURAL FILL. THE FOOTINGS SHALL BE PLACED A MINIMUM OF ONE FOOTING WITDH AWAY FROM ANY SLOPING FACE.
5. THE OWNER'S GEOTECHNICAL ENGINEER OR SPECIAL INSPECTOR SHALL OBSERVE THE NATURAL SOILS AT THE TIME OF FOOTING EXCAVATION TO DETERMINE THE SUITABLITIY OF THE NATURAL SOILS FOR SUPPORTING THE FOOTINGS.
6. STRUCTURAL FILL SHALL CONSIST OF WELL GRADED GRANULAR MATERIAL WITH A MAXIMUM SIZE OF 3 INCHES, A MAXIMUM OF 50% PASSING THE NO. 4 MESH AND BETWEEN 10 AND 25% PASSING THE NO. 200 SIEVE. ALL FINES SHALL HAVE A LIQUID LIMIT LESS THAN 20 AND A PLASITICITY INDEX LESS THAN 7.
7. STRUCTURAL FILL BELOW FOOTINGS AND BELOW SLAB ON GRADE SHALL BE PLACED IN MAXIMUM 8 INCH LOOSE LIFTS AND COMPACTED TO AT LEAST 95% OF MAXIMUM DENSITY AS DETERMINED BY ASTM D-1557 AND SHALL BE COMPACTED AT A MOISTURE CONTENT WITHIN 3% OF THE OPTIMUM MOISTURE CONTENT.
8. BACKFILL AROUND WALLS SHALL BE COMPACTED TO 95% OF MAXIMUM DENSTIY AS DETERMINED BY ASTM D-1557.
9. SLABS ON GRADE SHALL BE UNDERLAIN BY A MINIMUM OF 4" OF FREE-DRAINING GRANULAR MATERIAL. GRANULAR MATERIAL SHALL BE PLACED UPON PROPERLY PREPARED SUBGRADE AS DESCRIBED ABOVE.
10. COMPACTION OF STRUCTURAL FILL SHALL BE OBSERVED AND TESTED BY OWNER'S TESTING LABORATORY TO INSURE THAT THE ABOVE REQUIREMENTS ARE ACHIEVED.

FOOTINGS

1. EXTERIOR WALL FOOTINGS SHALL BEAR AT A MINIMUM DEPTH OF 2'-6" BELOW FINISHED EXTERIOR GRADE.
2. NO FOOTINGS SHALL BE PLACED IN WATER OR ON FROZEN GROUND.
3. WHERE A PIPE PASSES THROUGH AN INTERIOR OR EXTERIOR FOUNDATION WALL, STEP THE FOOTING DOWN TO PASS BELOW PIPE AND THEN STEP BACK UP TO INDICATED ELEVATION. PROVIDE PIPE SLEEVE THROUGH FOUNDATION WALL.

CONCRETE

1. ALL CONCRETE CONSTRUCTION TO CONFORM TO ACI 318 "BUILDING CODE REQUIREMENTS FOR STRUCTURAL CONCRETE," INCLUDING BAR BENDS AND HOOKS UNLESS SPECIFICALLY DETAILED OTHERWISE ON THESE DRAWINGS.
2. THE MINIMUM COMPRESSIVE STRENGTH OF CONCRETE AT 28 DAYS SHALL BE:

   FOOTINGS .... 3,000 PSI
   FOUNDATION WALLS .... 4,000 PSI
   INTERIOR SLABS ON GRADE .... 4,000 PSI
   EXTERIOR FLAT WORK .... 4,500 PSI

3. A STATEMENT OF MIX DESIGN FOR ALL CONCRETE SHALL BE SUBMITTED TO AND REVIEWED BY THE STRUCTURAL ENGINEER PRIOR TO COMMENCING WORK.
4. THE VARIOUS CONCRETE ITEMS ARE ASSIGNED TO THE FOLLOWING EXPOSURE CATEGORIES AND CLASSES PER SECTION 19.3 OF ACI 318-14:

   FOOTINGS F1, S1, W0, C1
   FOUNDATION WALLS F1, S1, W1, C1
   INTERIOR SLABS ON GRADE F0, S0, W0, C0
   EXTERIOR FLAT WORK F3, S1, W1, C1

5. USE CEMENT CONFORMING TO ASTM C150, TYPE II, LOW ALKALI.
6. ALL CONSTRUCTION JOINTS, EXPANSION JOINTS, AND OTHER TYPES OF JOINTS, OTHER THAN THOSE SPECIFICALLY SHOWN ON THE DRAWINGS TO BE APPROVED BY THE ENGINEER PRIOR TO PLACING CONCRETE.
7. PROVIDE 3/4-INCH CHAMFER AT ALL EXPOSED EDGES AND CORNERS UNLESS NOTED OTHERWISE.
8. BEFORE PLACING THE SECOND POUR AT CONSTRUCTION JOINTS, THOROUGHLY CLEAN AND ROUGHEN ALL JOINT SURFACES TO A MINIMUM AMPLITUDE OF 1/4 INCH.
9. UNLESS NOTED OTHERWISE ON THE DRAWINGS, REINFORCE CONCRETE WALLS AS FOLLOWS:

WIDTH	HORIZ REINF	VERT REINF
8" WALL	#5 @ 16"	#4 @ 16" CENTER OF WALL
10" WALL	#4 @ 12", EACH FACE	#4 @ 16", EACH FACE
12" WALL	#4 @ 12", EACH FACE	#4 @ 12", EACH FACE

REINFORCEMENT STEEL

1. PROVIDE REINFORCEMENT STEEL CONFORMING TO ASTM A615, GRADE 60 EXCEPT WHERE WELDING IS PERMITTED BY THE ENGINEER. PROVIDE STEEL CONFORMING TO ASTM A706 WHEN WELDING IS PERMITTED.
2. PROVIDE WELDED WIRE FABRIC CONFORMING TO ASTM A185.
3. DIMENSIONS GIVEN FOR REINFORCING BARS ARE TO BAR CENTERS UNLESS NOTED OTHERWISE. BAR COVER IS THE CLEAR DISTANCE BETWEEN BAR AND CONCRETE SURFACE. CLEARANCE FOR REINFORCEMENT BARS PER THE FOLLOWING UNLESS SHOWN OTHERWISE:

   WHEN PLACED AGAINST GROUND .... 3"
   FORMED SURFACES IN CONTACT WITH THE GROUND
   OR EXPOSED TO THE WEATHER .... 2"
   INTERIOR WALL SURFACES .... 1"
   ALL OTHER CONCRETE SURFACES .... 2"

4. CONTINUE WALL CORNER AND WALL INTERSECTION REINFORCEMENT BARS AROUND CORNERS AND THROUGH COLUMNS OR PILASTERS. EXTEND REINFORCEMENT INTO CONNECTING WALLS AND LAP ON THE OPPOSITE FACE OF THE CONNECTING WALLS.
5. UNLESS OTHERWISE NOTED, ALL HOOKS SHOWN ARE 90° STANDARD HOOK AS DEFINED IN ACI 318-11.
6. LAP VERTICAL WALL BARS WITH DOWELS FROM BELOW AND EXTEND THROUGH SLABS ABOVE TO TOP FACE. BEND AND/OR LAP TO TOP SLAB REINFORCEMENT AS INDICATED.
7. UNLESS OTHERWISE INDICATED, CONTRACTOR MAY SPLICE CONTINUOUS SLAB OR LONGITUDINAL BEAM BARS AT LOCATIONS OF HIS CHOOSING, EXCEPT THAT TOP BAR SPLICES ARE TO BE LOCATED AT MIDSPAN AND BOTTOM BAR SPLICES ARE TO BE LOCATED AT SUPPORTS. MINIMUM LAP REQUIREMENTS ARE AS FOLLOWS UNLESS OTHERWISE INDICATED.

LAP LENGTHS* – CONCRETE

BAR SIZE	#4	#5	#6	#7	#8	#9	#10	#11
CONCRETE DESIGN STRENGTH = 3000 PSI								
LAP LENGTH	1'-11"	2'-4"	2'-10"	4'-1"	4'-8"	5'-9"	7'-1"	8'-6'
CONCRETE DESIGN STRENGTH = 4000 PSI								
LAP LENGTH	1'-8"	2'-0'	2'-5"	3'-6"	4'-0"	5'-0"	6'-2"	7'-5"
CONCRETE DESIGN STRENGTH = 4500 PSI								
LAP LENGTH	1'-8"	2'-0"	2'-4"	3'-4"	3'-9"	4'-9"	5'-10"	7'-0'

*ASSUMES 2" MINIMUM CLEARANCE TO SURFACE

MASONRY

1. CONCRETE MASONRY UNITS SHALL CONFORM TO ASTM C90 GRADE N AND SHALL HAVE A MINIMUM COMPRESSIVE STRENGTH OF 2000 PSI BASED ON THE NET SECTION.
2. PROVIDE MORTAR CONFORMING TO ASTM C270, TYPE S, HYDRATED. DO NOT USE MASONRY CEMENT.
3. PROVIDE GROUT CONFORMING TO ASTM C476 WITH A MINIMUM 28-DAY COMPRESSIVE STRENGTH OF 2000 PSI.
4. DESIGN f'm FOR MASONRY ASSEMBLIES IS 2000 PSI.
5. GROUT ALL CMU WALLS SOLID.
6. PLACE THE MASONRY UNITS IN RUNNING BOND UNO ON THE DRAWINGS.
7. MASONRY WALL REINFORCEMENT SHALL BE PLACED IN GROUTED CELLS. UNLESS NOTED OTHERWISE ON THE DRAWINGS, REINFORCE MASONRY WALLS AS FOLLOWS:

WIDTH	HORIZ REINF	VERT REINF
8" WALL	(2) #4 @ 48"	#5 @ 32" (CENTER OF WALL)

8. ALL HORIZONTAL REINFORCING AT ENDS OF WALLS SHALL TERMINATE WITH A HOOK AROUND VERTICAL REINFORCING.
9. IN ADDITION TO HORIZONTAL REINFORCING, LADDER-TYPE REINFORCING CONSISTING OF #9 WIRE FOR EACH FACE SHELL OF EACH WYTHE SHALL BE USED AT 16" OC HORIZONTALLY IN ALL MASONRY WALLS. REINFORCEMENT SHALL BE FOR TOTAL WIDTH OF CAVITY WALLS.
10. REINFORCEMENT PROTECTION (COVER):
    A. JOINT REINFORCEMENT SHALL HAVE NOT LESS THAN 5/8" MORTAR COVERAGE FROM THE EXPOSED FACE.
    B. REINFORCEMENT SHALL HAVE A MINIMUM COVERAGE OF 2" FROM OUTSIDE FACE OF MASONRY WITH A MINIMUM OF ½" GROUT BETWEEN REINFORCING AND MASONRY UNITS.
11. ALL VERTICAL REINFORCING BARS SHALL BE DOWELED TO STRUCTURE BELOW WITH BARS OF SAME SIZE AND SPACING. LAP REINFORCING BARS AS FOLLOWS UNLESS OTHERWISE NOTED ON THE DRAWINGS:

LAP LENGTHS – MASONRY

BAR SIZE	#3	#4	#5	#6	#7	#8	#9
SINGLE MAT (CENTER IN WALL)							
LAP LENGTH	1'-0"	1'-3"	1'-11"	3'-7"	5'-0"	6'-0"	MECH

MECH = MECHANICAL SPLICE REQUIRED

12. AN ADDITIONAL VERTICAL BAR (MATCHING WALL REINFORCEMENT) SHALL BE PLACED AT EACH CORNER, AND ENDS OF WALLS.
13. AT ALL OPENINGS GROUT WALL SOLID FOR FULL HEIGHT AT JAMBS OF OPENINGS, ONE CELL FOR EACH 4'-0" OF SPAN OR PORTION THEREOF (EXAMPLE: FOR 6'-0" SPAN, GROUT TWO CELLS AT EACH SIDE OF OPENING). REINFORCE EACH GROUTED CELL WITH STANDARD VERTICAL WALL REINFORCING BARS, TYPICAL, U.N.O.
14. AT MASONRY BEAMS ABOVE OPENINGS HORIZONTAL REINFORCING BARS IN THE BOTTOM OF THE MASONRY BEAM SHALL EXTEND 2'-0" BEYOND THE EDGE OF THE OPENING OR SHALL BE HOOKED IF REQUIRED. DO NOT SPLICE HORIZONTAL TOP AND/OR BOTTOM REINFORCING BARS IN MASONRY BEAM, TYPICAL, U.N.O.
15. MASONRY BEAMS SHALL BE BUILT AS AN INTEGRAL PART OF THE SUPPORT. NO TOOTHING OR DOWELLING ONLY WILL BE PERMITTED AT SUPPORTS.
16. AT SMALL OPENINGS IN MASONRY WALLS (NOT SHOWN ON DRAWINGS) PROVIDE (1) #5 ON ALL SIDES OF OPENINGS WITH A MINIMUM PROJECTION OF 2'-0" BEYOND EDGES.
17. STOP GROUT POURS 1/2" BELOW TOP OF BLOCK UNITS BETWEEN GROUT LIFTS.
18. ALL ANCHOR BOLTS TO BE PLACED IN GROUTED CELLS.

STRUCTURAL STEEL

1. UNLESS NOTED OTHERWISE, PROVIDE STRUCTURAL STEEL CONFORMING TO ASTM A36. ROLLED WIDE FLANGE SHAPES TO CONFORM TO ASTM A992. PIPE TO CONFORM TO ASTM A53, TYPE E OR S, GRADE B. STRUCTURAL TUBING TO CONFORM TO ASTM A1085. FABRICATE AND ERECT ALL STRUCTURAL STEEL IN CONFORMANCE WITH AISC SPECIFICATIONS.
2. USE A325 OR F1852 BOLTS FOR STEEL TO STEEL CONNECTIONS, F1554 GR36 FOR ANCHOR BOLTS, AND A307 BOLTS FOR ALL OTHER CONNECTIONS (UNLESS SPECIFIED OTHERWISE ON DRAWINGS). USE 3/4" DIAMETER MINIMUM.
3. ALL HIGH-STRENGTH BOLTS SHALL BE INSTALLED IN ACCORDANCE WITH AISC "SPECIFICATIONS FOR STRUCTURAL JOINTS USING ASTM A325 OR A490 BOLTS." THE TURN-OF-NUT METHOD MAY BE USED. PROVIDE CARBONIZED WASHERS UNDER THE TURNED ELEMENT.
4. USE ONLY CERTIFIED WELDERS FOR ALL WELDING WORK. USE FILLER METAL HAVING A MINIMUM TENSILE STRENGTH OF 70 KSI AND PERFORM ALL WORK IN ACCORDANCE WITH THE CURRENT STRUCTURAL WELDING CODE (AWS D1.1).
5. UNLESS OTHERWISE NOTED, COAT ALL STRUCTURAL STEEL COMPONENTS WITH PAINT OF OTHER PROTECTIVE COATINGS AS SPECIFIED IN THE PROJECT SPECIFICATIONS.
6. STRUCTURAL STEEL, WHICH IS TO BE EMBEDDED INTO CONCRETE TO BE CLEAN AND FREE OF PAINT, OIL, OR DIRT.

LOADING CRITERIA

1. BUILDING RISK CATEGORY — III
2. DEAD LOAD — CALCULATED FROM UNIT WEIGHT
3. WIND LOAD:
   BASIC WIND SPEED — 120 MPH
   EXPOSURE — C
4. SNOW LOAD:
   GROUND SNOW LOAD — 43 PSF
   FLAT ROOF SNOW LOAD — 33 PSF
   SNOW EXPOSURE COEFFICIENT — 1.0
   SNOW IMPORTANCE FACTOR — 1.1
   SNOW THERMAL FACTOR — 1.0
5. SEISMIC LOAD:
   PROCEDURE: EQUIVALENT LATERAL FORCE
   SITE CLASS: — D
   IMPORTANCE FACTOR: — 1.25
   SEISMIC DESIGN CATEGORY: — D
   SPECTRAL RESPONSE COEF:
   S_{DS} — 0.919g
   S_{D1} — 0.467g
   BASIC SEISMIC-FORCE-RESISTING SYSTEM:
   SPECIAL REINFORCED MASONRY SHEAR WALLS
   R = 5, OMEGA = 2.5, C_d = 3.5
6. FROST DEPTH: — 30 INCHES
7. ALLOWABLE SOIL BEARING CAPACITY — 2,500 PSF

SPECIAL INSPECTIONS

1. SPECIAL INSPECTION IN ACCORDANCE WITH APPROPRIATE SECTIONS OF IBC 2015, CHAPTER 17 IS REQUIRED FOR THE PROJECT.
2. THE SPECIAL INSPECTOR SHALL SUBMIT A FINAL SIGNED REPORT STATING WHETHER THE WORK REQUIRING SPECIAL INSPECTION WAS, TO THE BEST OF THE INSPECTOR'S KNOWLEDGE, IN CONFORMANCE WITH THE APPROVED PLANS AND SPECIFICATIONS AND THE APPLICABLE WORKMANSHIP PROVISIONS OF THE CODE, TO THE BUILDING OFFICIAL AND THE ENGINEER.
3. AN APPLICATION FOR OFF-SITE FABRICATION SHALL BE SUBMITTED TO THE BUILDING OFFICIAL FOR APPROVAL PRIOR TO FABRICATION.
4. A CERTIFICATE OF COMPLIANCE FOR OFF-SITE FABRICATION SHALL BE COMPLETED AND SUBMITTED TO THE BUILDING OFFICIAL FOR APPROVAL PRIOR TO ERECTION OF PREFABRICATED COMPONENTS. SPECIAL INSPECTION REQUIRED PER IBC SECTION 1704.2.
5. SPECIAL INSPECTION ITEMS REQUIRED PER LIST BELOW. CONTINUOUS OR PERIODIC INSPECTIONS IS DESIGNATED WITH A (C) OR (P).

MASONRY (LEVEL B): (TMS 402/ACI 530/ASCE 5 AND TMS 602/ACI 530.1/ASCE 6)
A. VERIFICATION OF APPROVED SUBMITTAL DOCUMENTS FOR MATERIALS.---------- P
B. VERIFICATION OF PROPORTIONS OF SITE-PREPARED MORTAR AND GROUT. ---------- P
C. PREPARATION OF REQUIRED GROUT AND MORTAR SPECIMENS AND PRISMS. ---------- P
D. PLACEMENT OF MASONRY UNITS AND JOINTS.---------- P
E. GROUT SPACE PRIOR TO GROUTING. ---------- P
F. VERIFY SIZE AND LOCATION OF STRUCTURAL ELEMENTS.---------- P
G. VERIFY TYPE, SIZE, AND LOCATION OF ANCHORS. ---------- P
H. VERIFY SIZE, TYPE, AND LOCATION OF REINFORCEMENT. ---------- P
I. PLACEMENT OF GROUT.---------- C
J. VERIFY PROTECTION OF MASONRY DURING COLD AND HOT WEATHER.---------- P

STEEL: (CHAPTER N, AISC 360-10)
A. VERIFICATION OF HIGH-STRENGTH BOLTS, NUTS, AND WASHERS, INCLUDING IDENTIFICATION MARKINGS TO CONFIRM ASTM REQUIREMENTS SPECIFIED IN APPROVED CONSTRUCTION DOCUMENTS. ---------- P
B. MANUFACTURERS' CERTIFIED MILL TEST REPORTS.---------- P
C. FIELD WELDED CONNECTIONS INCLUDING FILLET WELDS AND DECK WELDS ---------- P
D. INSTALLATION OF HIGH-STRENGTH BOLTED CONNECTIONS.
SNUG-TIGHT BOLTS ---------- P

SOILS: (IBC TABLE 1705.6)
A. VERIFY MATERIALS BELOW FOOTINGS ARE ADEQUATE FOR FOOTING SUPPORT.---------- P
B. VERIFY EXCAVATIONS ARE TO PROPER DEPTH.---------- P
C. VERIFY PROPERTIES OF COMPACTED FILL PRIOR TO PLACEMENT MEET REQUIREMENTS OF PROJECT.---------- P
D. PRIOR TO PLACEMENT OF COMPACTED FILL OBSERVE SUBGRADE AND VERIFY THAT THE SITE HAS BEEN PREPARED PROPERLY.---------- P
E. VERIFY PROPER USE OF COMPACTED FILL INCLUDING PROPER MATERIALS, COMPACTION DENSITIES AND LIFT THICKNESS. ---------- C

STRUCTURAL OBSERVATION

BOWEN COLLINS & ASSOCIATES SHALL BE NOTIFIED BY THE CONTRACTOR 5 BUSINESS DAYS BEFORE THE COMPLETION OF THE ITEMS LISTED IN THIS SECTION SO THAT STRUCTURAL OBSERVATION MAY BE PERFORMED IN ACCORDANCE WITH IBC SECTION 1704.5. THE OBSERVATIONS WILL BE PERFORMED AT THE DISCRETION OF BOWEN COLLINS & ASSOCIATES. COMPLETED OBSERAVATION REPORTS WILL BE SUBMITTED TO THE BUILDING OFFICIAL.

- MASONRY CONSTRUCTION PRIOR TO FIRST GROUT PLACEMENT
- STEEL ROOF DECK AFTER COMPLETION OF WELDING ROOF DECK AND PRIOR TO PLACEMENT OF ROOFING MATERIALS.

BOWEN COLLINS & ASSOCIATES

STEPHEN D. COHEN #176558 STRUCTURAL ENGINEER STATE OF UTAH PROFESSIONAL
10-23-18

NO.	DATE	REV. BY	DESCRIPTION

REVISIONS

SOUTH VALLEY WATER RECLAMATION FACILITY
LAB EXPANSION AND REMODEL
WEST JORDAN, UTAH

VERIFY SCALE
BAR IS ONE INCH ON ORIGINAL DRAWING

DESIGN: DESIGN S. COHEN; DRAWN S. DUCKWORTH
REVIEW: CHECKED B. MAYERS; APPROVED B. MAYERS

STRUCTURAL
GENERAL NOTES

PROJECT NUMBER 177-18-01
DATE: OCTOBER 2018

DRAWING NO. S-01
SHEET 35 OF 79

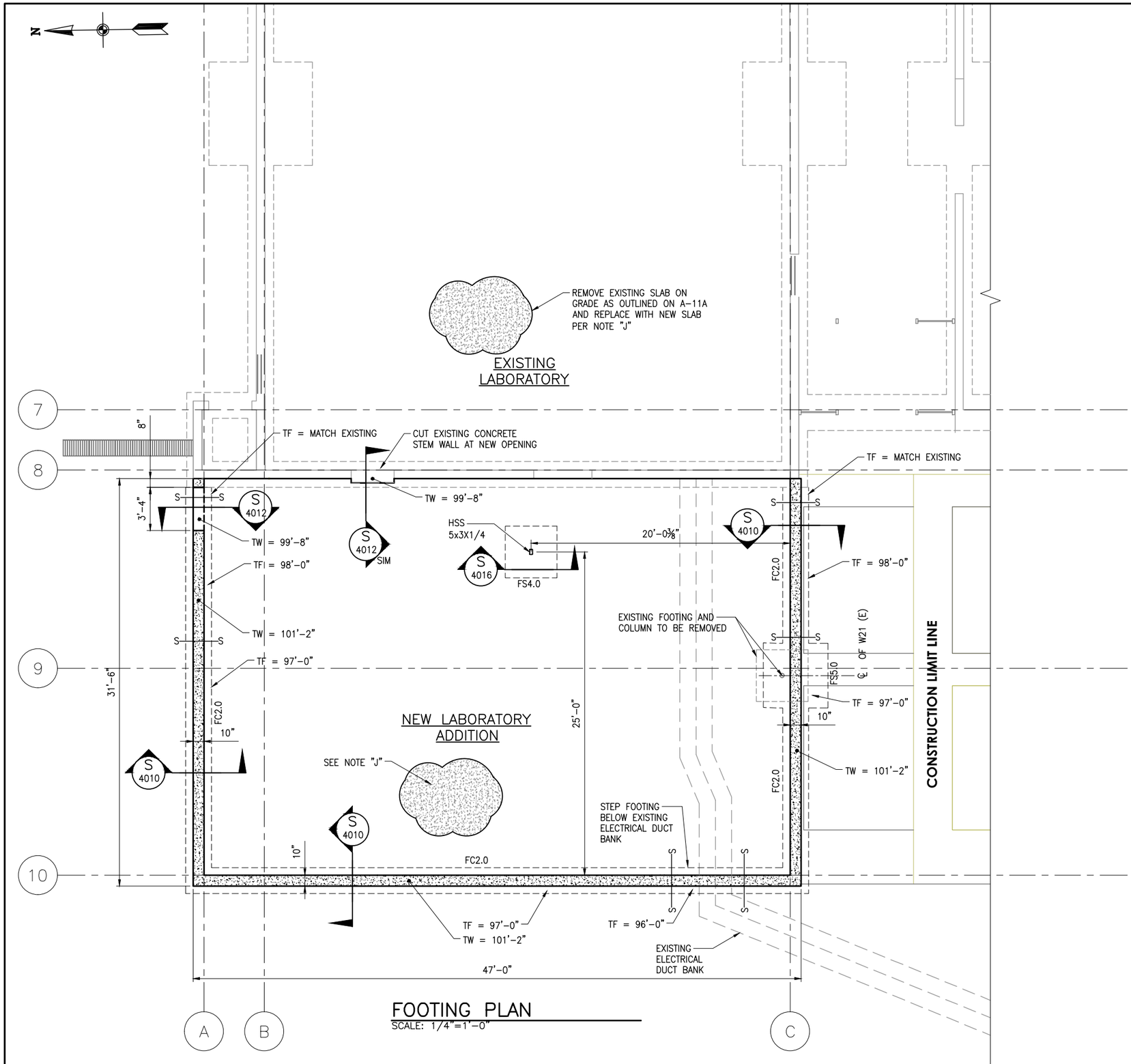

FOOTING PLAN
SCALE: 1/4"=1'-0"

FOOTING & FDTN PLAN NOTES

SEE ARCHITECTURAL DRAWINGS FOR DIMENSIONS NOT SHOWN ON STRUCTURAL DRAWINGS

A. SEE STRUCTURAL NOTES ON SHEET S-01 FOR ADDITIONAL INFORMATION INCLUDING SITE PREPARATION NOTES.
B. FINISHED FLOOR ELEVATION (FFE) 100'-0" = EXISTING BUILDING FINISHED FLOOR ELEVATION. (SITE ELEVATION 4300.5')
C. FOR FOOTING STEP, SEE DETAIL S/4014. STEP LOCATIONS ARE SHOWN SCHEMATICALLY ONLY. COORDINATE STEPS WITH FINISH GRADES AND FLOOR ELEVATIONS TO MAINTAIN MINIMUM FROST DEPTH.
D. FOOTING ELEVATIONS SHOWN ARE BASED ON A UNIFORM GRADE 6" BELOW SLAB PLUS 2'-6" FROST COVER. COORDINATE ELEVATIONS SHOWN WITH CIVIL AND SITE PLANS FOR ANY ADDITIONAL DEPTH THAT MAY BE REQUIRED TO MAINTAIN MINIMUM FROST COVER OVER FOOTINGS.
E. CENTER FOOTINGS ON WALLS AND COLUMNS UNLESS DIMENSIONED OTHERWISE ON PLANS.
F. FC2.0 IS A 2'-0" WIDE CONCRETE FOOTING. SEE DETAIL S/4010 FOR REINFORCING.
G. FS4.0 IS A 4'-0" SQUARE FOOTING BY 12" THICK. REINFORCE WITH FOUR #5 AT 14" OC EACH WAY.
H. FS5.0 IS A 5'-0" SQUARE FOOTING BY 12" THICK. REINFORCE WITH FIVE #5 AT 13.5" OC EACH WAY.
I. SEE PLAN AND SECTIONS FOR TOP OF FOUNDATION WALL ELEVATIONS.
J. SLAB ON GRADE SHALL BE 4" CONCRETE OVER 4" FREE-DRAINING GRAVEL, UNO. REINFORCE SLAB WITH 6x6-W1.4xW1.4 WWF (USE FLAT SHEETS).
K. SEE DETAIL S/4039 AND SHEET GS-02 FOR TYPICAL CONCRETE AND MASONRY WALL REINFORCEMENT. REINFORCE PER STRUCTURAL NOTES ON SHEET S-01 U.N.O.
L. SEE ARCHITECTURAL & SITE DRAWINGS FOR INFORMATION AND LOCATION OF SITE WALLS, STEPS, PLANTERS, RAMPS, ETC.

LEGEND:

TF = TOP OF FOOTING
TW = TOP OF WALL
S --- S = STEP FOOTING PER DETAIL S/4014

BOWEN COLLINS & ASSOCIATES

PROFESSIONAL STRUCTURAL ENGINEER STEPHEN D. COHEN #176558 STATE OF UTAH
10-23-18

NO.	DATE	REV. BY	DESCRIPTION

REVISIONS

SOUTH VALLEY WATER RECLAMATION FACILITY
LAB EXPANSION AND REMODEL
WEST JORDAN, UTAH

VERIFY SCALE
BAR IS ONE INCH ON ORIGINAL DRAWING

DESIGN
DESIGN S. COHEN
DRAWN R. GARCIA

REVIEW
CHECKED B. MAYERS
APPROVED B. MAYERS

STRUCTURAL
LABORATORY FLOOR PLAN

DATE: OCTOBER 2018
PROJECT NUMBER 177-18-01

DRAWING NO.
S-02

SHEET 36 OF 79

P:\South Valley WRF\SVWRF Lab Expansion\Project Folder\2.0 Design Phase\2.7 Drawings\Sht\1771801_S-02.dwg Plotted: 10/24/2018 5:07 PM By: Rodolfo Garcia

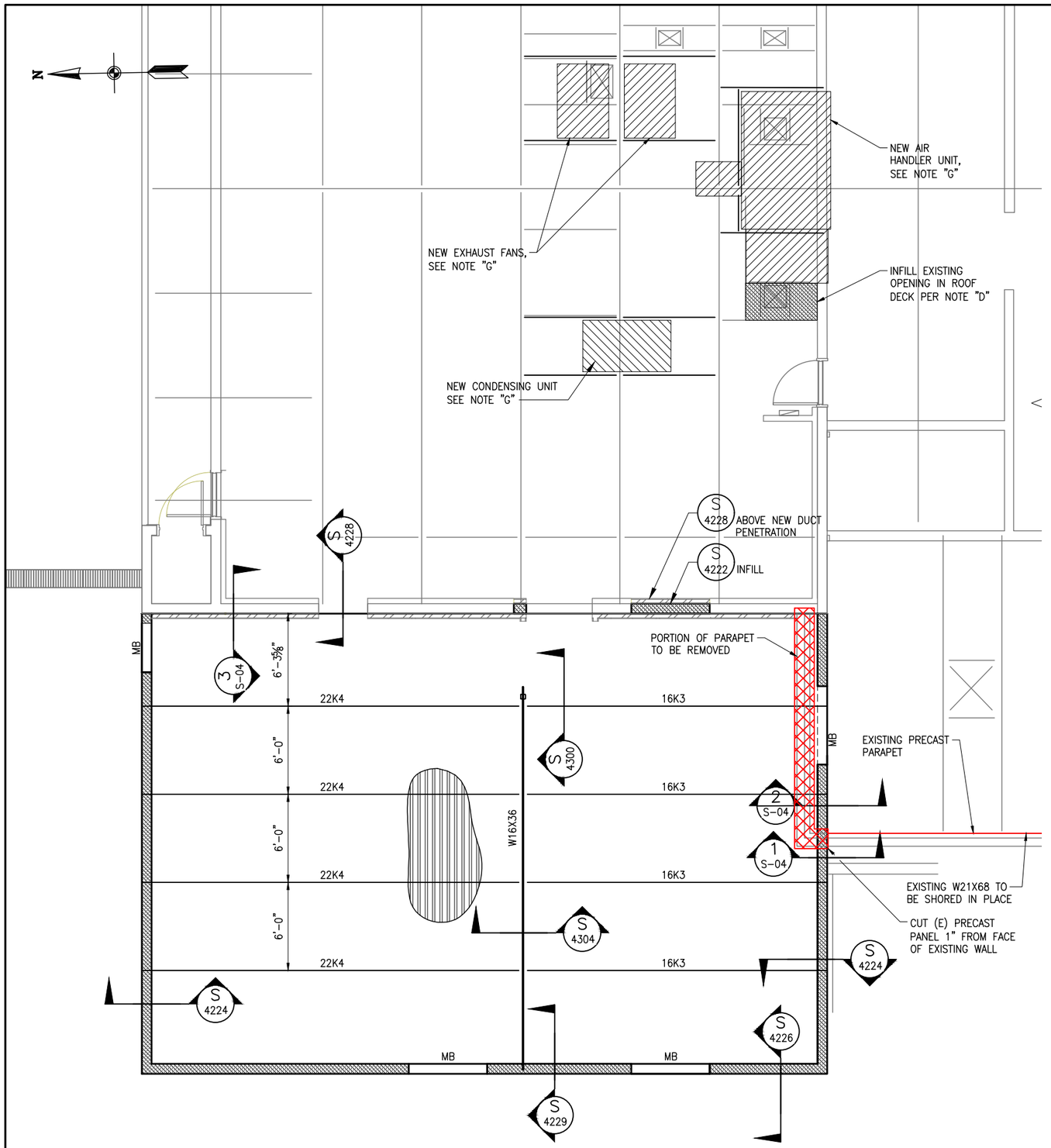

ROOF FRAMING PLAN

SCALE: 1/4"=1'-0"

ROOF FRAMING PLAN NOTES

SEE ARCHITECTURAL DRAWINGS FOR ALL DIMENSIONS, TYPICAL.

A. SEE STRUCTURAL NOTES ON SHEET S-01 FOR ADDITIONAL INFORMATION.
B. SEE ARCHITECTURAL DRAWINGS FOR DECK BEARING ELEVATIONS. SEE DETAIL S/4302 FOR TYPICAL BEAM TO BEAM CONNECTION.
C. SEE DETAIL S/4300 FOR TYPICAL BEAM TO COLUMN CONNECTION.
D. ROOF DECK SHALL BE 1½" VERCO TYPE "HSB-36", 20 GAUGE, GALVANIZED, OR EQUIVALENT. PLACE DECK 3 SPANS CONTINUOUS, MIN.
E. DECK ATTACHMENT AS FOLLOWS:
- SPAN PERP TO SUPPORTS: ¾"Φ PUDDLE WELD @ ALL DECK FLUTES.
- SPAN PARLL TO SUPPORTS: ¾"Φ PUDDLE WELDS@ 12" OC.
- SEAMS: 1.112" TOP SEAM WELDS@ 12" OC.

F. SEE S/4329 FOR TYPICAL ROOF OPENING DETAIL.
G. PROVIDE ANGLE FRAMES BELOW SIDES OF MECHANICAL UNITS AND ON ALL SIDES OF OPENINGS. COORDINATE LOCATIONS WITH MECHANICAL DRAWINGS. ROOF PENETRATIONS 8" OR LARGER SHALL HAVE ANGLE FRAMING PER DETAIL S/4329. ROOF PENETRATIONS SMALLER THAN 8" SHALL BE DETAILED PER S/4328.
H. ROOF JOISTS AND GIRDERS SUPPORTING MECHANICAL UNITS SHALL BE DESIGNED FOR ADDITIONAL LOADS OF THE UNITS. COORDINATE WEIGHTS, SIZES AND LOCATIONS WITH MECHANICAL DRAWINGS. DUCT PENETRATIONS BELOW UNITS NOT SHOWN.
I. SEE DETAIL S/4327 FOR POINT LOADS OCCURING AWAY FROM PANEL POINTS.
J. MB INDICATES A MASONRY BEAM OVER AN OPENING. REINFORCE WITH TWO #5 IN BOTTOM OF MASONRY BEAM PER S/4204.

BOWEN COLLINS & ASSOCIATES

PROFESSIONAL STRUCTURAL ENGINEER STEPHEN D. COHEN #176558 STATE OF UTAH

10-23-18

NO.	DATE	REV. BY	DESCRIPTION

REVISIONS

SOUTH VALLEY WATER RECLAMATION FACILITY
LAB EXPANSION AND REMODEL
WEST JORDAN, UTAH

VERIFY SCALE
BAR IS ONE INCH ON ORIGINAL DRAWING

REVIEW
CHECKED B. MAYERS
APPROVED B. MAYERS

DESIGN
DESIGN S. COHEN
DRAWN R. GARCIA

STRUCTURAL
LABORATORY
ROOF PLAN AND NOTES

DATE: OCTOBER 2018
PROJECT NUMBER 177-18-01

DRAWING NO.
S-03

SHEET 37 OF 79

P:\South Valley WRF\SVWRF Lab Expansion\Project Folder\2.0 Design Phase\2.7 Drawings\Sht\1771801_S-03.dwg Plotted: 10/24/2018 5:04 PM By: Rodolfo Garcia

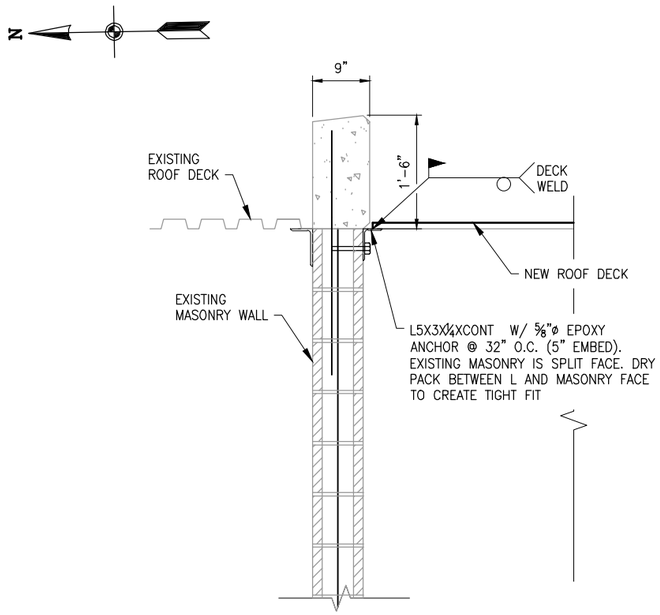

SECTION 3 / S-04
SCALE:1"=1'-0"

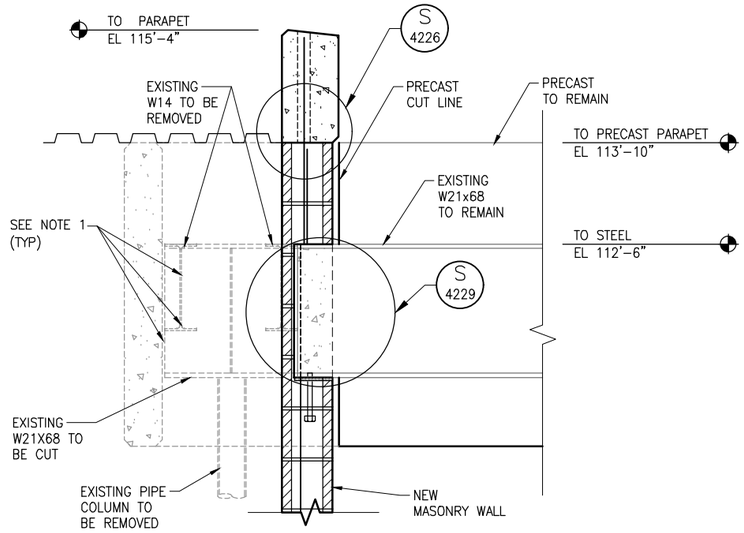

SECTION 1 / S-03
SCALE:1"=1'-0"

NOTES:
1. ELEMENTS IN GRAY DASHED COLOR ARE TO BE REMOVED.

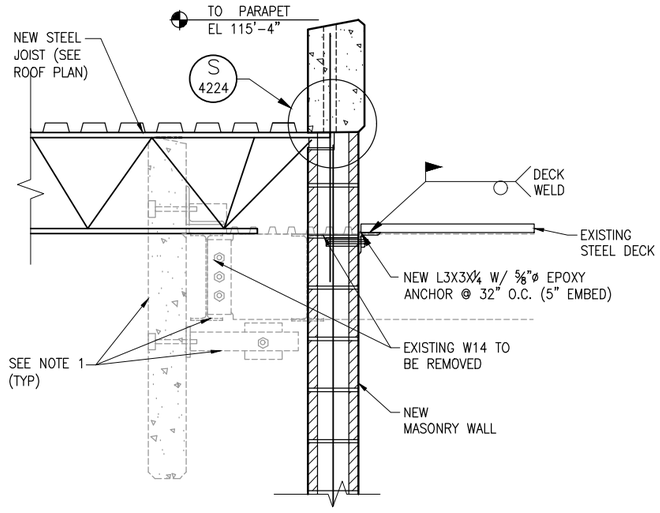

SECTION 2 / S-03
SCALE:1"=1'-0"

BOWEN COLLINS & ASSOCIATES

STEPHEN D. COHEN
10-23-18

NO.	DATE	REV. BY	DESCRIPTION

REVISIONS

SOUTH VALLEY WATER RECLAMATION FACILITY
LAB EXPANSION AND REMODEL
WEST JORDAN, UTAH

VERIFY SCALE
BAR IS ONE INCH ON ORIGINAL DRAWING

REVIEW
CHECKED B. MAYERS
APPROVED B. MAYERS

DESIGN
DESIGN S. COHEN
DRAWN R. GARCIA

STRUCTURAL
LABORATORY SECTIONS AND DETAILS

PROJECT NUMBER 177-18-01
DATE: OCTOBER 2018

DRAWING NO.
S-04
SHEET 38 OF 79

P:\South Valley WRF\SVWRF Lab Expansion\Project Folder\2.0 Design Phase\2.7 Drawings\Sht\1771801_S-04.dwg Plotted: 10/23/2018 11:40 AM By: Tim Anderson

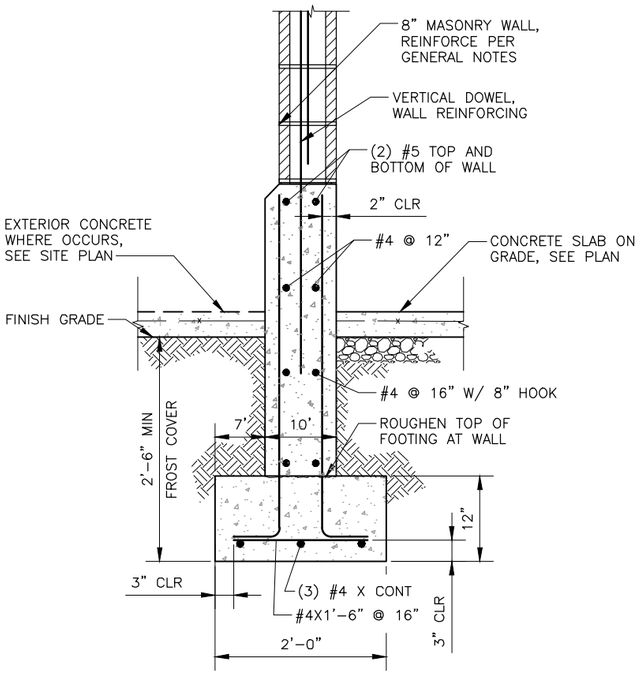

FOOTING DETAIL S 4010
SCALE: NTS

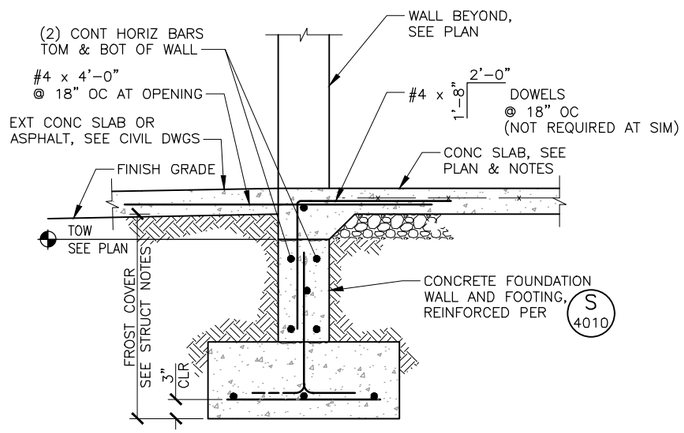

NOTE:

1. AT SIM USE EPOXY DOWEL TO TIE TO EXISTING SLAB (4" EMBED).

FOOTING DETAIL S 4012
SCALE: NTS

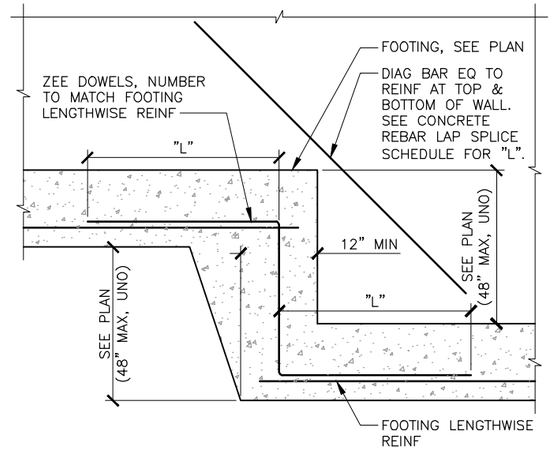

FOOTING STEP DETAIL S 4014
SCALE: NTS

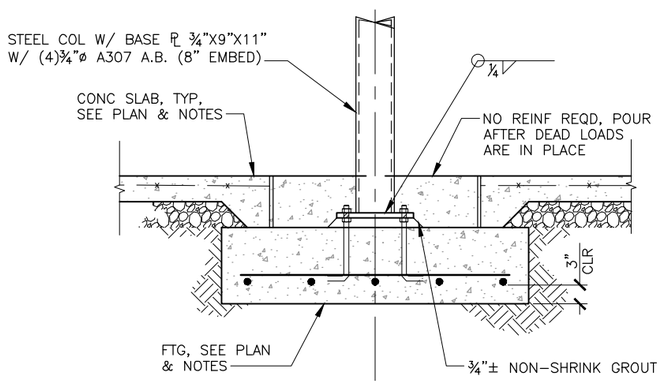

FOOTING DETAIL S 4016
SCALE: NTS

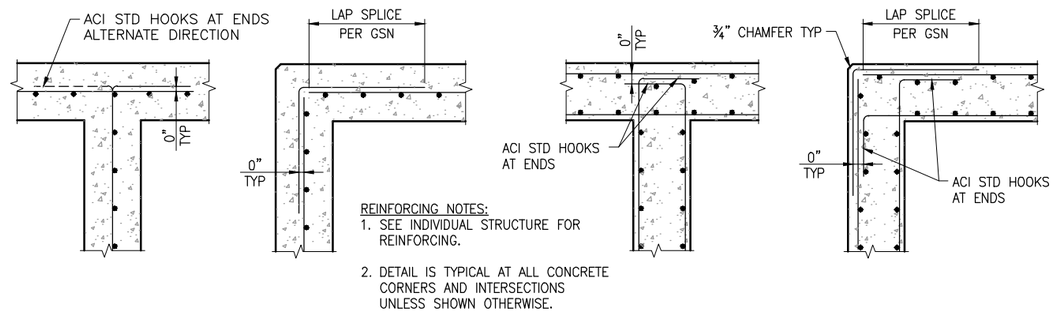

SINGLE-CURTAIN REINFORCING

DOUBLE-CURTAIN REINFORCING

WALL REINFORCING AT CORNERS AND JUNCTIONS S 4039
NOT TO SCALE

BOWEN COLLINS & ASSOCIATES

STEPHEN D. COHEN — PROFESSIONAL ENGINEER — STRUCTURAL — STATE OF UTAH — 10-23-18

NO.	DATE	REV. BY	DESCRIPTION
			REVISIONS

SOUTH VALLEY WATER RECLAMATION FACILITY
LAB EXPANSION AND REMODEL
WEST JORDAN, UTAH

VERIFY SCALE
BAR IS ONE INCH ON ORIGINAL DRAWING

DESIGN S. COHEN
DRAWN S. DUCKWORTH
REVIEW CHECKED B. MAYERS APPROVED B. MAYERS

STRUCTURAL
GENERAL STRUCTURAL DETAILS - 1
DATE: OCTOBER 2018
PROJECT NUMBER 177-18-01

DRAWING NO. GS-01
SHEET 39 OF 79

P:\South Valley WRF\SVWRF Lab Expansion\Project Folder\2.0 Design Phase\2.7 Drawings\Sht\1771801_GS-01.dwg Plotted: 10/23/2018 11:33 AM By: Tim Anderson

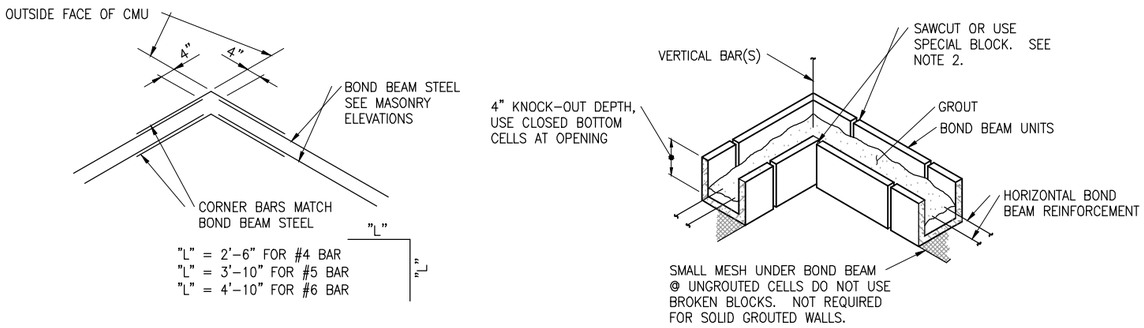

BOND BEAM CORNER DETAIL

NOT TO SCALE — S 4201

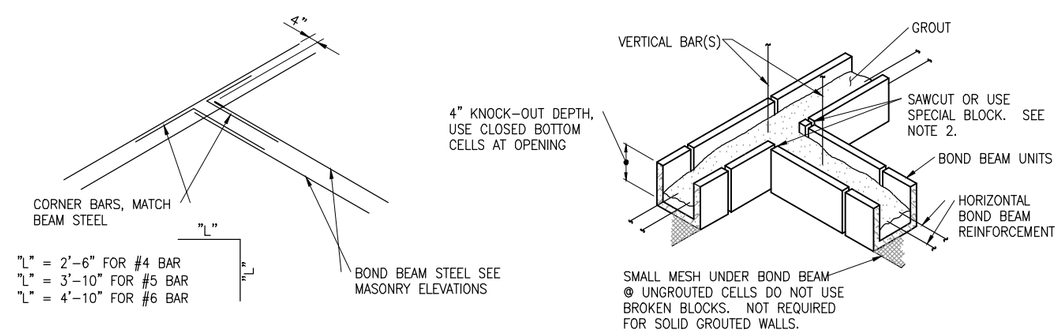

BOND BEAM INTERSECTION DETAIL

NOT TO SCALE — S 4202

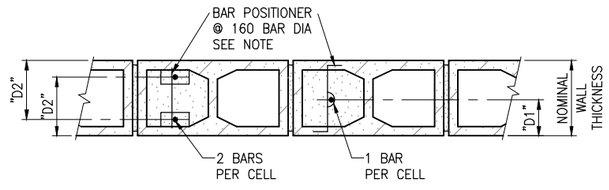

NOTE:
A MINIMUM OF 1 BAR POSITIONER SHALL BE LOCATED WITHIN 12" OF TOP OF INDIVIDUAL BARS.

VERTICAL BAR LOCATION		
NOMINAL WALL THICKNESS	"D1"	"D2"
6"	2.81"	–
8"	3.81"	5.31"
12"	5.81"	8.81"

VERT WALL STEEL LOCATION

NOT TO SCALE — S 4203

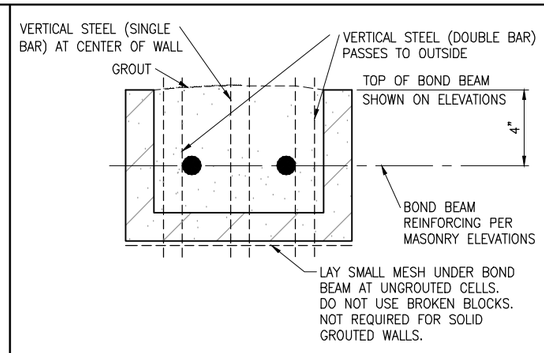

BOND BEAM SECTION

NOT TO SCALE — S 4204

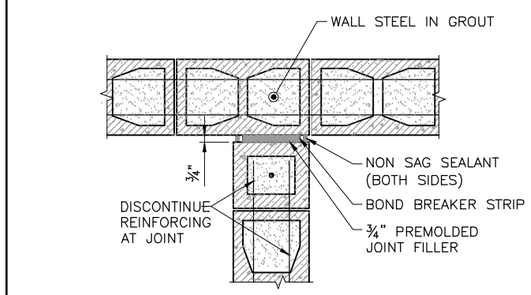

MASONRY CONTROL JOINT

NOT TO SCALE — S 4205

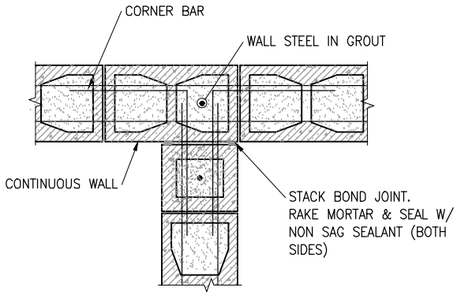

MASONRY CONTROL JOINT

NOT TO SCALE — S 4206

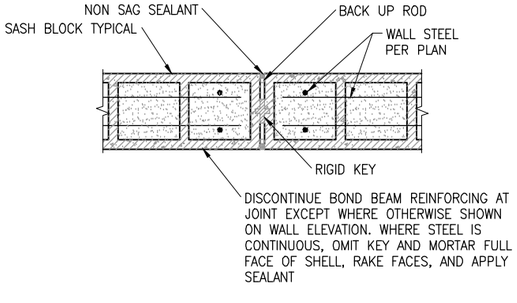

MASONRY CONTROL JOINT

NOT TO SCALE — S 4207

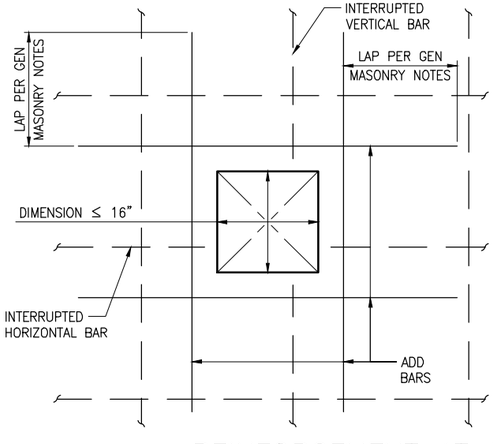

REINFORCEMENT AT MASONRY OPENING

NOT TO SCALE — S 4208

DETAIL NOTES:

1. THIS DETAIL IS TO BE USED FOR OPENINGS LESS THAN 16" IN ANY DIRECTION AND WHEN CALLED FOR ON THE DRAWINGS OR WHEN NO OTHER ADDITIONAL REINFORCING IS SPECIFIED. SEE ELEVATIONS FOR OPENINGS LARGER THAN 16".
2. ADD BARS AT EACH EDGE OF OPENING IN EACH DIRECTION SHALL MATCH THE CROSS SECTIONAL AREA OF THE INTERRUPTED BAR. WHERE NO BARS ARE INTERRUPTED PROVIDE #4 MINIMUM. FIT ADD BARS WITHIN THE ADJACENT CELLS FROM THE EDGE OF THE OPENING.
3. CUT NORMAL REINFORCING 2" CLEAR OF OPENING.
4. PROVIDE STANDARD ACI HOOKS ON BARS/DOWELS IF STRAIGHT EXTENSION PAST THE OPENING CANNOT BE ACHIEVED.
5. PLACE ADD BARS IN SAME PLANES AS NORMAL REINFORCING INDICATED.

GENERAL MASONRY NOTES

1. THE NUMBER AND SIZE OF FOOTING DOWELS REQUIRED TO THE FOUNDATION SHALL BE PER MASONRY WALL ELEVATIONS AND FOUNDATION DETAILS.
2. WHERE MASONRY ELEVATIONS INDICATE MASONRY CONTROL JOINTS (MCJ), THE BOND BEAM STEEL SHALL BE CONTINUOUS OR DISCONTINUOUS AS SHOWN ON THE ELEVATION. WHERE STEEL IS TO BE CONTINUOUS, RAKE MORTAR JOINT ON BOTH SIDES OF WALL AND APPLY SEALANT TO MATCH CONTROL JOINT DETAILS.
3. FOR LOCATIONS OF PIPE SLEEVES, CINDUITS, AND OTHER MECHANICAL AND ELECTRICAL PENETRATIONS, REFER TO PERTINENT UTILITY DRAWINGS.
4. SEE ARCHITECTURAL ELEVATIONS AND DETAILS FOR LOCATION OF MASONRY FINISH(S).
5. ALL BLOCK SIZES (NOMINAL) ARE INDICATED ON THE FOUNDATION PLAN.
6. SPECIAL INSPECTION PER APPROPRIATE SECTIONS OF THE 2015 INTERNATIONAL BUILDING CODE ARE REQUIRED.
7. ALL WALLS ON THIS PROJECT ARE TO BE SOLID GROUTED REGARDLESS OF WHETHER GROUT IS SHOWN ON GENERAL DETAILS OR NOT.

BOWEN COLLINS & ASSOCIATES

STEPHEN D. COHEN — STRUCTURAL ENGINEER — 170058 — STATE OF UTAH — 10-23-18

REVISIONS

NO.	DESCRIPTION	DATE	REV. BY

SOUTH VALLEY WATER RECLAMATION FACILITY
LAB EXPANSION AND REMODEL
WEST JORDAN, UTAH

VERIFY SCALE
BAR IS ONE INCH ON ORIGINAL DRAWING

REVIEW
CHECKED B. MAYERS
APPROVED B. MAYERS

DESIGN
DESIGN S. COHEN
DRAWN S. DUCKWORTH

STRUCTURAL
GENERAL STRUCTURAL DETAILS - 2

PROJECT NUMBER 1771-18-01
DATE: OCTOBER 2018

DRAWING NO. GS-02
SHEET 40 OF 79

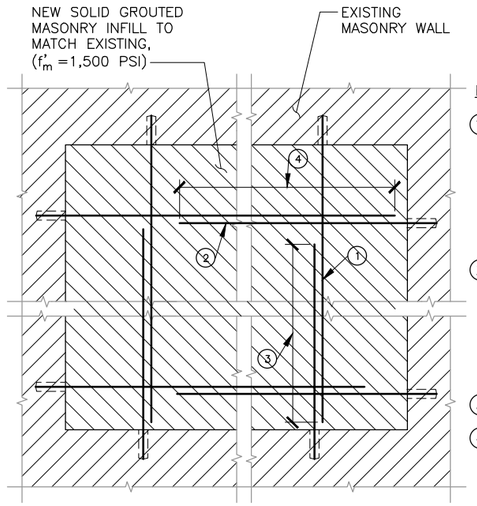

MASONRY INFILL NOTES:

1. #5 @ 24" OC VERT BARS, DRILLED & EPOXIED 5" INTO EXISTING STRUCTURE. PROVIDE GROUT IN CELLS OF EXISTING MASONRY 2F UNROUTED.
2. #5 @ 48" OC HORIZ BARS. (PROVIDE A MINIMUM OF (2) BARS AT EACH INFILL.) DRILL & EPOXY 5" INTO EXISTING STRUCTURE.
3. 24" LAP, MIN.
4. 24" LAP, MIN.

MASONRY INFILL
SCALE: NTS

S 4222

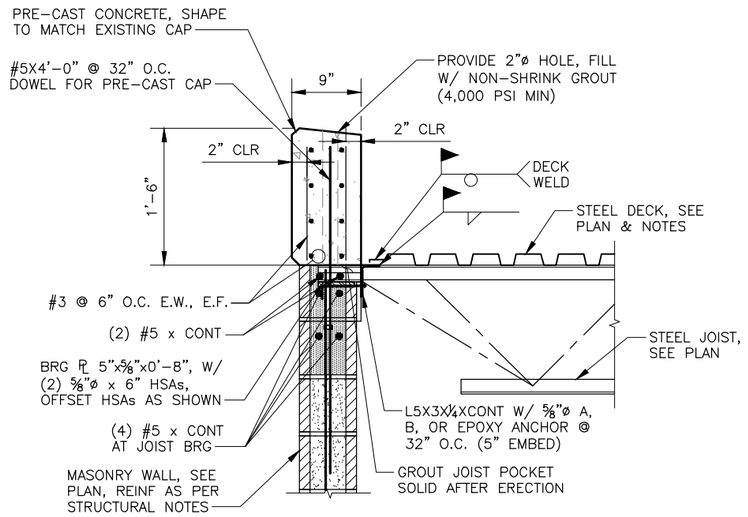

JOIST BRACING
SCALE: NTS

S 4224

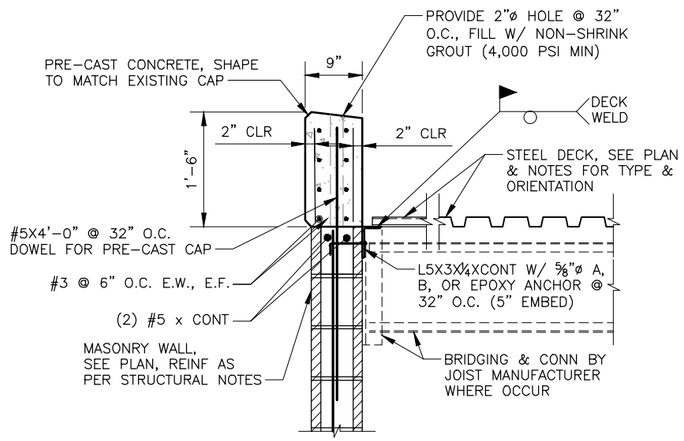

DECK CONNECTION
SCALE: NTS

S 4226

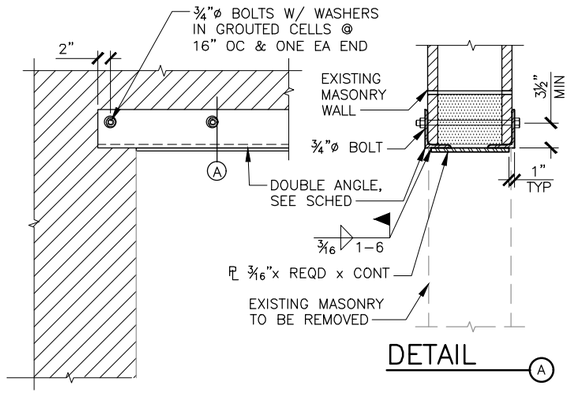

DETAIL A

MASONRY LINTEL SCHEDULE	
CLEAR OPENING	LINTEL
UP TO 4'-0"	(2) L5x3x¼
4'-0" – 6'-0"	(2) L5x3x5/16
6'-0" – 8'-0"	(2) L5x3x⅜
8'-0" – 10'-0"	(2) L6x3½x5/16
10'-0" – 12'-0"	(2) L6x3½x⅜

NOTES:

1. LINTELS OVER 12'-0" SHALL BE ANALYZED INDIVIDUALLY.
2. BEARING = 1" PER FOOT OF SPAN (6" MIN).
3. UNLESS NOTED OTHERWISE, USE LINTELS AS SHOWN.
4. INSERT ANGLES INTO SLOT CUT INTO MASONRY AND BOLT ANGLES TOGETHER BEFORE REMOVING THE EXISTING MASONRY WALL.

MASONRY LINTEL
SCALE: NTS

S 4228

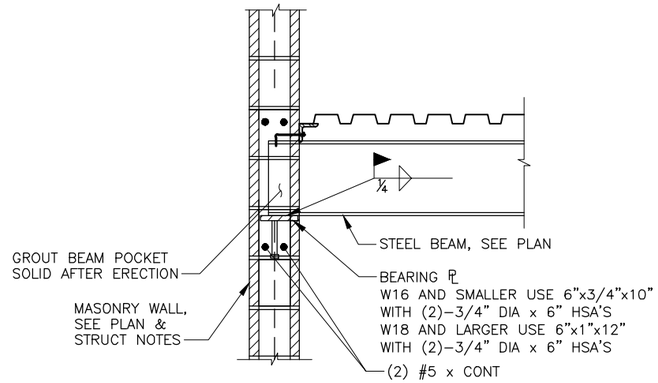

MASONARY WALL CONNECTION
SCALE: NTS

S 4229

BOWEN COLLINS & ASSOCIATES

STEPHEN D. COHEN — STRUCTURAL ENGINEER — 7700 — STATE OF UTAH — PROFESSIONAL ENGINEER — 10-23-18

NO.	DATE	REV. BY	DESCRIPTION
			REVISIONS

SOUTH VALLEY WATER RECLAMATION FACILITY
WEST JORDAN, UTAH
LAB EXPANSION AND REMODEL

VERIFY SCALE
BAR IS ONE INCH ON ORIGINAL DRAWING

DESIGN S. COHEN — REVIEW CHECKED B. MAYERS — APPROVED B. MAYERS
DRAWN S. DUCKWORTH

STRUCTURAL

GENERAL STRUCTURAL DETAILS - 3

DATE: OCTOBER 2018
PROJECT NUMBER 177-18-01

DRAWING NO. GS-03
SHEET 41 OF 79

P:\South Valley WRF\SVWRF Lab Expansion\Project Folder\2.0 Design Phase\2.7 Drawings\Sht\1771801_GS-03.dwg Plotted: 10/23/2018 11:31 AM By: Tim Anderson

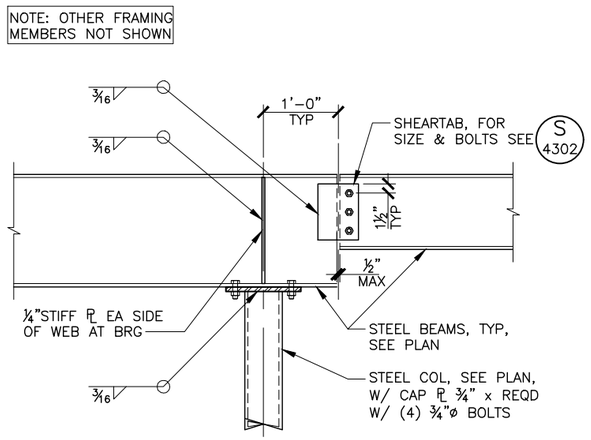

COLUMN CONNECTION S 4300
SCALE: NTS

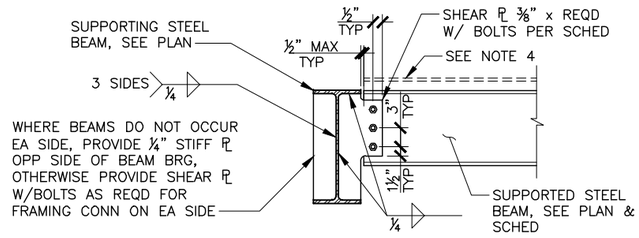

BOLT SCHEDULE		
W8, W10	(2) ¾"ø	1. SEE FRAMING PLANS FOR BEAM SIZES. 2. ALL BOLTS SHALL BE A325-N, UNO. 3. STEEL DECK & JOISTS NOT SHOWN. 4. BEAM MAY OCCUR HIGHER FOR DECK BEARING, COORD W/PLAN.
W12, W14	(3) ¾"ø	
W16, W18	(4) ¾"ø	
W21, W24	(5) ¾"ø	
W27	(6) ¾"ø	

BEAM CONNECTION S 4302
SCALE: NTS

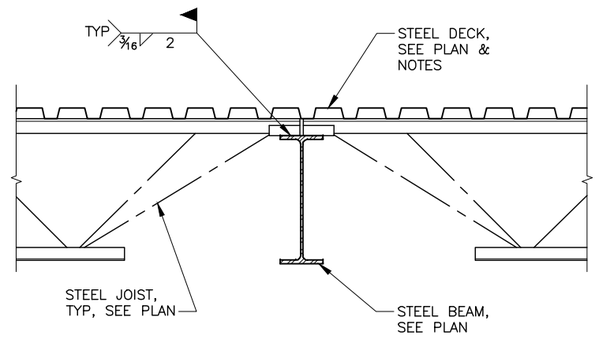

JOIST BEARING S 4304
SCALE: NTS

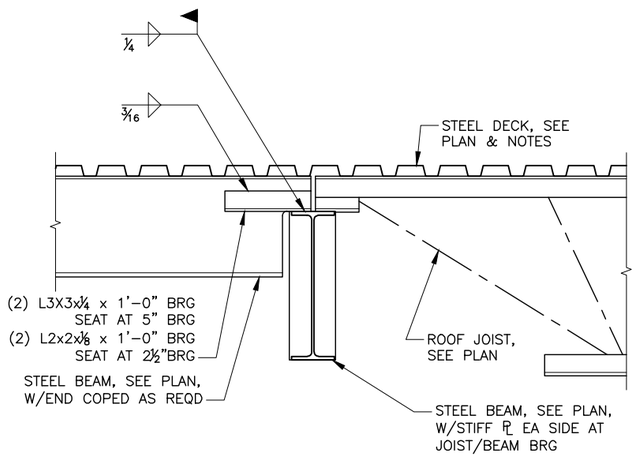

JOIST BEARING S 4306
SCALE: NTS

NOTE:
CONTRACTOR TO COORDINATE SIZE OF CONCRETE PAD WITH EQUIPMENT MANUFACTURER.

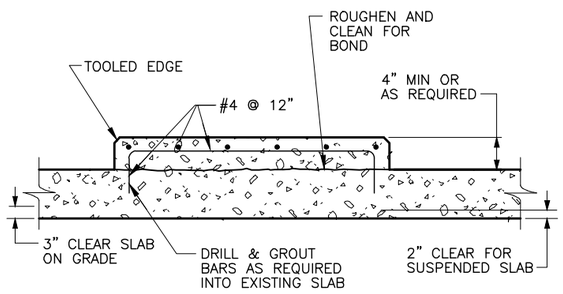

HOUSEKEEPING PAD S 4310
SCALE: NTS

BOWEN COLLINS & ASSOCIATES

STEPHEN D. COHEN #176558 STATE OF UTAH PROFESSIONAL STRUCTURAL ENGINEER
10-23-18

NO.	DATE	REV. BY	DESCRIPTION

REVISIONS

VERIFY SCALE
BAR IS ONE INCH ON ORIGINAL DRAWING

SOUTH VALLEY WATER RECLAMATION FACILITY
LAB EXPANSION AND REMODEL
WEST JORDAN, UTAH

DESIGN
DESIGN S. COHEN
DRAWN S. DUCKWORTH

REVIEW
CHECKED B. MAYERS
APPROVED B. MAYERS

STRUCTURAL
GENERAL STRUCTURAL DETAILS – 4

DATE: OCTOBER 2018
PROJECT NUMBER 177-18-01

DRAWING NO.
GS-04

SHEET 42 OF 79

P:\South Valley WRF\SVWRF Lab Expansion\Project Folder\2.0 Design Phase\2.7 Drawings\Sht\1771801_GS-04.dwg Plotted: 10/31/2018 3:40 PM By: Rodolfo Garcia

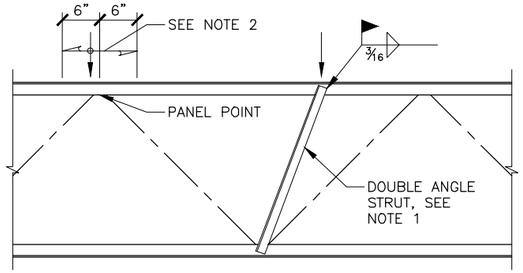

CONCENTRATED LOADS ON TOP CHORD OF JOISTS

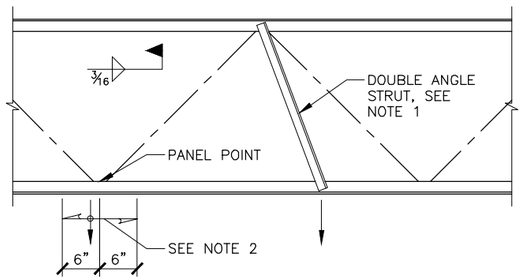

CONCENTRATED LOADS ON BOTTOM CHORD OF JOISTS

NOTES:

1. PROVIDE DOUBLE ANGLE STRUTS BETWEEN CONCENTRATED LOAD AND PANEL POINT ON OPPOSITE CHORD WHERE CONCENTRATED LOADS EXCEED 150#. ANGLE STRUTS SHALL BE AS FOLLOWS:

DEPTH OF JOIST	ANGLE SIZE
UP TO 30"	(2) L1½x1½x¼
30" TO 48"	(2) L2x2x¼
48" TO 60"	(2) L2½x2½x¼

2. WHERE CONCENTRATED LOADS OCCUR WITHIN 6" OF PANEL POINT, NO STRUT IS REQUIRED

JOIST LOAD DETAILS

SCALE: NTS

S 4327

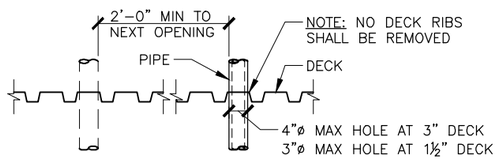

MAXIMUM UNREINFORCED OPENING

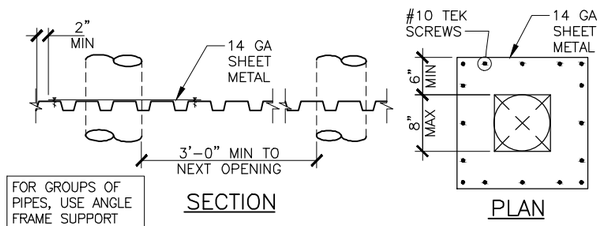

FOR GROUPS OF PIPES, USE ANGLE FRAME SUPPORT AROUND OPENINGS.

SECTION

PLAN

REINFORCED OPENING TO 8" MAXIMUM

PIPE OPENINGS

SCALE: NTS

S 4328

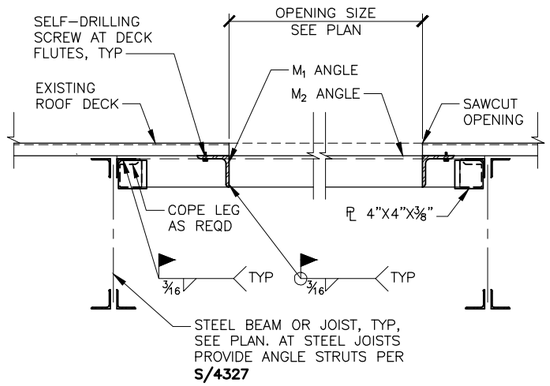

FRAMING FOR PENETRATION THRU EXISTING DECK

SECTION A

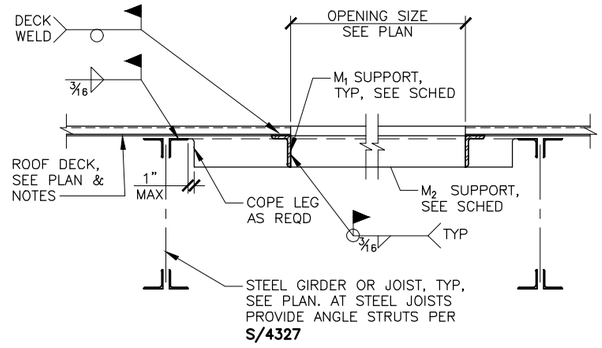

FRAMING FOR PENETRATION BEFORE PLACING DECK

SECTION B

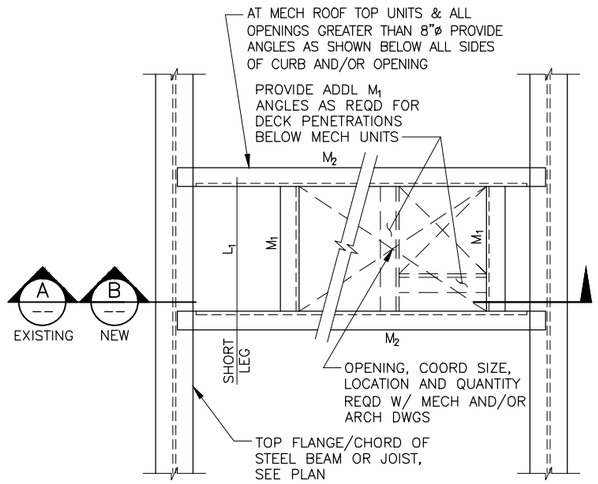

FRAME OPENING SCHEDULE			
FRAMING CONDITION	L_1 LENGTH	M_1 SIZE	M_2 SIZE
ROOF	UP TO 4'-0"	L3x3x¼	L3x3x¼
	4'-0" UP TO 8'-0"	L5x3x¼	L5x3x¼
	UP TO 6'-0"**	L5x3x¼	L5x3x¼

NOTES:
1. CONTACT ENGINEER FOR OPENINGS LARGER THAN THOSE SHOWN IN TABLE
2. **ALLOWANCE FOR (2) 600# POINT LOADS (ONE ON EACH M) FOR GREATER LOADS, CONTACT ENGINEER.
3. FOR OPENINGS 8" AND SMALLER, SEE **S/4328**

FRAMING DETAILS

SCALE: NTS

S 4329

BOWEN COLLINS & ASSOCIATES

STEPHEN D. COHEN 177008 STRUCTURAL ENGINEER STATE OF UTAH

10-23-18

REVISIONS

NO.	DATE	REV. BY	DESCRIPTION

SOUTH VALLEY WATER RECLAMATION FACILITY
WEST JORDAN, UTAH

LAB EXPANSION AND REMODEL

VERIFY SCALE
BAR IS ONE INCH ON ORIGINAL DRAWING

DESIGN S. COHEN
DRAWN S. DUCKWORTH
CHECKED REVIEW B. MAYERS
APPROVED B. MAYERS

STRUCTURAL

GENERAL STRUCTURAL DETAILS - 5

DATE: OCTOBER 2018
PROJECT NUMBER 177-18-01

DRAWING NO. GS-05

SHEET 43 OF 79

MECHANICAL LEGEND

SYMBOL	ABR,	DESCRIPTION
GENERAL TERMINOLOGY		
A / ME101		SECTION LETTER DESIGNATION / SECTION DRAWN ON THIS SHEET
A2		DETAIL NUMBER DESIGNATION CORRESPONDING WITH GRID LOCATION
AH / 1		MECHANICAL EQUIPMENT DESIGNATION / EQUIPMENT ITEM DESIGNATION
D-1 / CFM		REGISTER, GRILLE OR DIFFUSER DESIGNATION WITH BALANCING CFM LISTED BELOW
R-1		GRILLE OR LOUVER DESIGNATION WHERE BALANCING NOT REQUIRED
1		REVISION DESIGNATOR AND NUMBER
1		KEY NOTE DESIGNATOR AND NUMBER
	POC	POINT OF CONNECTION
	POR	POINT OF REMOVAL
AFF		ABOVE FINISHED FLOOR
AP		ACCESS PANEL
C EL.		CENTERLINE ELEVATION
GC		GENERAL CONTRACTOR
MC		MECHANICAL CONTRACTOR
ATC		CONTROLS CONTRACTOR
EC		ELECTRICAL CONTRACTOR
FPC		FIRE PROTECTION CONTRACTOR
NIC		NOT IN CONTRACT
NTS		NOT TO SCALE
VCP		VITRIFIED CLAY PIPE
C		COMMON
NC		NORMALLY CLOSED
NO		NORMALLY OPEN

SYMBOL	ABR,	DESCRIPTION
AIR SIDE		
		EXISTING AIR DUCT TO BE REMOVED
		EXISTING AIR DUCT TO REMAIN
		NEW AIR DUCT
		RECT TO RECT AIR DUCT TAKE-OFF
		RECT TO RND AIR DUCT TAKE-OFF
		RND TO RND AIR DUCT TAKE-OFF
		MEDIUM PRESSURE TAKE-OFF
		FLEXIBLE AIR DUCT
		LINED DUCT
		RADIUS ELBOW
		ECCENTRIC DUCT TRANSITION
		CONCENTRIC DUCT TRANSITION
		VOLUME DAMPER
		SUPPLY AIR DIFFUSER
		RETURN & TRANSFER AIR GRILLE
		EXHAUST GRILLE OR CEILING EXH. FAN
		RETURN & OUTSIDE AIR DUCT UP/DN
		RETURN & OA ROUND DUCT UP/DN
		SUPPLY AIR DUCT UP/DN
		SUPPLY AIR ROUND DUCT UP/DN
		EXHAUST AIR DUCT UP/DN
		EXHAUST AIR ROUND DUCT UP/DN
	AP	ACCESS PANEL
		EXISTING EQUIPMENT TO BE REMOVED
		EXISTING EQUIPMENT TO REMAIN
		NEW EQUIPMENT
SA		SUPPLY AIR
RA		RETURN AIR
EA		EXHAUST AIR
OA		OUTSIDE AIR
MA		MIXED AIR
RF		RELIEF AIR
FO		FLAT OVAL
M	MVD	MOTORIZED VOLUME DAMPER
BD	BD	BACKDRAFT DAMPER
F	FD	FIRE DAMPER
S	SD	SMOKE DAMPER
FS	FS	FIRE & SMOKE DAMPER
T	T-STAT	WALL MOUNTED THERMOSTAT
S		WALL MOUNTED TEMP. SENSOR
H	H-STAT	WALL MOUNTED HUMIDISTAT
F	F-STAT	WALL MOUNTED FIRESTAT

SYMBOL	ABR,	DESCRIPTION
WET SIDE		
		PUMP
R		REGULATOR
		UNION
		MANUAL ACTUATOR
M		ELECTRIC MOTOR ACTUATOR
S		SOLENOID ACTUATOR
		BUTTERFLY VALVE
		GATE VALVE
		CHECK VALVE
		CIRCUIT BALANCING VALVE
		BALL VALVE
		STRAINER
		STRAINER W/ PLUG BLOW OFF
		PRESSURE GAUGE W/ COCK - WATER
		THERMOMETER & THERMOWELL
S		WATER TEMP SENSOR & THERMOWELL
PS		PRESSURE SWITCH
		THERMOWELL
		PRESSURE & TEMP TAP
		NEW PIPING
		PIPE CAP OR PLUG
		EXPANSION JOINT
		FLEXIBLE CONNECTION
		ANCHOR POINT
	CD	CONDENSATE DRAIN
	G	NATURAL GAS PIPING
	CF	CHEMICAL FEED LINE
		EXISTING PIPING TO BE REMOVED
	MU	MAKE-UP WATER LINE
		EXISTING PIPING TO REMAIN
	CW	CULINARY COLD WATER
	HW	CULINARY HOT WATER
	HWREC	CULINARY HOT WATER RECIRC
	HWS	HEATING WATER SUPPLY
	HWR	HEATING WATER RETURN
	CHWS	CHILLED WATER SUPPLY
	CHWR	CHILLED WATER RETURN
		DIRECTION OF FLOW
		BACKFLOW PREVENTING VALVE
		PITCH DOWN
		ELBOW UP/DN
		TEE UP/DN

GENERAL NOTES

G-1 - MECHANICAL INFORMATION IS NOT LIMITED TO THE MECHANICAL DRAWINGS. CONTRACTOR SHALL BE RESPONSIBLE FOR INFORMATION OF THE EXISTING BUILDING AND SITE CONDITIONS, EXISTING PIPING, EXISTING ELECTRICAL, AND EXISTING SUPPORTS.

A - EACH DRAWING SHEET AND THE SPECIFICATIONS HAVE BEEN PREPARED TO SUPPLEMENT EACH OTHER AND THEY SHALL BE INTERPRETED AS AN INTEGRAL UNIT WITH ITEMS SHOWN AND NOTED ON ONE AND NOT THE OTHER BEING FURNISHED AND INSTALLED AS THOUGH SHOWN AND CALLED OUT IN ALL PLACES. ITEMS IN SPECIFICATIONS OR DRAWINGS LISTED WHICH ARE DIFFERING IN EFFICIENCY OR QUALITY SHALL BE HELD TO THE GREATEST OF: EFFICIENCY, QUALITY OR GOVERNING CODE.

B - THE CONTRACTOR WILL BE HELD RESPONSIBLE FOR THE INSTALLATION OF THE SYSTEMS ACCORDING TO THE TRUE INTENT AND MEANING OF THE CONTRACT DOCUMENTS.

C - THE CONTRACTOR SHALL INSTALL ALL EQUIPMENT WITH PROPER SERVICE ACCESS AND CLEARANCES ACCORDING TO MANUFACTURERS RECOMMENDATIONS. THE CONTRACTOR SHALL REVIEW SUPPLIERS BID PACKAGES FOR COMPLETENESS AND COMPLIANCE TO THE SPECIFICATIONS, SCHEDULES, AND DESIGN INTENT (ALL EQUIPMENT AND METHODS). THE CONTRACTOR SHALL REMOVE AND REINSTALL CORRECTLY AT HIS OWN EXPENSE ANY EQUIPMENT NOT IN COMPLIANCE.

D - THE CONTRACTOR SHALL CONSULT MANUFACTURERS INSTALLATION INSTRUCTIONS FOR SIZES, METHODS, ACCESSORIES, AND CLEARANCES IN SPACE AVAILABLE PRIOR TO BIDDING PROJECT.

E - ANYTHING NOT CLEAR OR IN CONFLICT WILL BE EXPLAINED BY MAKING APPLICATION TO THE ENGINEER IN WRITING.

G-2 - ANY AND ALL ALTERATIONS TO THE SYSTEM SHOWN SHALL BE SUBMITTED TO THE ENGINEER PRIOR TO CHANGES FOR APPROVAL. CONTRACTOR SHALL NOT START ANY CHANGES UNTIL NOTIFIED IN WRITING. IF CHANGES ARE MADE PRIOR TO APPROVAL CONTRACTOR SHALL TAKE ALL RESPONSIBILITY FOR THE CHANGES MADE AND ALL COSTS RELATING TO FAILURE OR REPLACEMENT OF ALTERATIONS.

G-3 - CONTRACTOR SHALL FIELD VERIFY ALL DIMENSIONS AND LOCATIONS.

G-4 - THE WORKING DRAWINGS ARE DIAGRAMMATIC. THEY DO NOT SHOW EVERY OFFSET, BEND, OR ELBOW NECESSARY FOR THE COMPLETE INSTALLATION IN THE SPACE PROVIDED. ALL LOCATIONS FOR MECHANICAL EQUIPMENT SHALL BE FIELD VERIFIED AND COORDINATED WITH ALL DRAWINGS. THE CONTRACTOR SHALL PROVIDE OR COORDINATE WITH THE GENERAL CONTRACTOR PROVISIONS FOR BLOCKOUTS OR CORE DRILLS THROUGH STRUCTURE.

G-5 - THE INSTRUCTION TO "PROVIDE" ALSO INCLUDES INSTALLATION.

G-6 - MECHANICAL CONTRACTOR SHALL PROVIDE AND INSTALL SMOKE AND FIRE DAMPERS AS REQUIRED BY LOCAL CODES AND AUTHORITIES.

G-7 - SHEET METAL DUCT SIZES SHOWN ON DRAWINGS ARE FREE AREA DIMENSIONS.

G-8 - PROVIDE AND INSTALL BALANCING DAMPERS IN ALL SUPPLY AND EXHAUST AIR BRANCH DUCTS. BALANCE TO CFM SHOWN ON PLAN.

G-9 - SEE ARCHITECTURAL REFLECTED CEILING PLAN FOR EXACT LOCATION OF DIFFUSERS AND GRILLES.

G-10 - PROVIDE TURNING VANES IN ALL ELBOWS OF RECTANGULAR DUCT.

G-11 - THE CONTRACTOR SHALL ASSUME ALL RESPONSIBILITY IN HANDLING AND DISPOSING OF REFRIGERANTS, OILS, ETC. ALL SUCH MATERIALS SHALL BE HANDLED, DISPOSED, AND USED IN ACCORDANCE WITH ALL LOCAL, STATE, AND FEDERAL LAWS.

G-12 - THE MECHANICAL CONTRACTOR SHALL VERIFY MOTOR VOLTAGES WITH THE ELECTRICAL DRAWING BEFORE ORDERING MOTORIZED EQUIPMENT AND CONTROLS.

G-13 - C.F.M. LISTED IS ACTUAL AIR.

G-14 - SUPPLIERS SHALL REVIEW ALL DRAWINGS AND THE SPECIFICATIONS PRIOR TO SUBMITTING PRICES TO THE CONTRACTOR. ALL QUESTIONS AND DISCREPANCIES SHALL BE BROUGHT TO THE ENGINEERS ATTENTION PRIOR TO BIDDING.

G-15 - CONTRACTOR SHALL THOROUGHLY REVIEW AND SIGN SUBMITTALS FOR COMPLETENESS AND COMPLIANCE TO THE SPECIFICATIONS PRIOR TO ENGINEERS REVIEW. SUPPLIERS SHALL HIGHLIGHT OR MARK ALL INFORMATION REQUIRED TO SHOW COMPLIANCE TO THE SPECIFICATIONS. ALL REQUESTED EXCEPTIONS TO THE SPECIFICATIONS, OR SCHEDULES SHALL BE CLEARLY NOTED AND EXPLAINED. SUBMITTAL REVIEW AND ACCEPTANCE IS FOR DESIGN CONCEPT ONLY, AND DOES NOT AT ANY TIME RELIEVE THE CONTRACTOR OF RESPONSIBILITY TO MEET SPECIFICATIONS, CAPACITIES, OR DESIGN INTENT.

G-16 - ALL MECHANICAL SHALL BE INSTALLED AND CONFORM TO THE 2015 EDITION OF THE IMC AND IPC WITH UTAH ANNOTATIONS AND LOCAL AUTHORITY REQUIREMENTS.

G-17 - THIS CONTRACTOR SHALL BE RESPONSIBLE FOR THE DRAINING DOWN AND RE-FILLING OF ALL SYSTEMS NECESSARY TO COMPLETE THE WORK OUTLINED BY THIS PROJECT. THIS INCLUDES PROVIDING THE REQUIRED CHEMICAL TREATMENT WHEN RE-FILLING THE SYSTEM.

G-18 - ALL PIPING, MATERIALS, ETC. SHALL BE NEW AND DOMESTIC MADE UNLESS SPECIFICALLY AUTHORIZED IN WRITING PRIOR TO BID.

G-19 - PROVIDE FIRE SPRINKLER MODIFICATIONS PER PERFORMANCE SPECIFICATION THROUGH NICET LEVEL 3 CERTIFIED DESIGN BUILD FIRE SPRINKLER CONTRACTOR.

PROFESSIONAL ENGINEER
10/25/18
WINWARD M. PACKER
No. 375080
STATE OF UTAH

BOWEN COLLINS & ASSOCIATES

WHW ENGINEERING INC.
PROFESSIONAL MECHANICAL ENGINEERING
8619 Sandy Parkway Suite 101
Sandy, Utah 84070
801-466-4021, fax 466-8536
Email: excellence@whw-engineering.com

REVISIONS

NO.	DATE	REV. BY	DESCRIPTION

South Valley Water Reclamation Facility
Lab Expansion and Remodel
7495 South 1300 West
West Jordan, Utah 84084

VERIFY SCALE
BAR IS ONE INCH
ORIGINAL DRAWING

REVIEW: CHECKED, APPROVED
DESIGN: DESIGN, DRAWN

MECHANICAL LEGEND AND GENERAL NOTES

PROJECT NUMBER 17906.00
DATE OCTOBER 31, 2018

DRAWING NO. H-01
SHEET 44 OF 79

AIR HANDLER UNIT SCHEDULE

TAG						ELECTRICAL						COOLING WATER						REFRIGERATION COIL					HEATING								DIMENSIONS					
TYPE	#	AREA SERVED	CFM	CFM (OUTSIDE AIR)	ESP	VOLTAGE	PHASE	FREQUENCY	HP	MCA	MOCP	APD	TOTAL CAPACITY	GPM	WATER PRESSURE DROP	EWT	LWT	EDB/LDB	CAPACITY	APD	EADB, EAWB, LADB	APD	BTU/HR	GPM	WATER PRESSURE DROP	EWT	LWT	EAT	LAT	LENGTH	WIDTH	HEIGHT	OPERATING WEIGHT	MANUF & MODEL	SCHEDULE NOTES
AH	1	LABORATORY	6,700 CFM	6,700 CFM	2 in-wg	460 V	3	60 Hz	7.5 hp	14 A	30 A	0.3 in-wg	267,000 Btu/h	53.2 GPM	6 ftH2O	45 °F	55 °F	100/52 F	300 MBH	0.25	97, 65, 55	0.1 in-wg	436,000 Btu/h	22 GPM	0.7 ftH2O	180 °F	140 °F	5 °F	75 °F	162"	72"	45"	3441 lb	TRANE CSSA	1,2,3,4,5,6

1. ALL UNITS OVER 2,000 CFM MUST BE EQUIPPED WITH SMOKE DETECTORS.
2. WATER VELOCITY SHALL BE BETWEEN 1.5 FPS AND 3.0 FPS.
3. MINIMUM OF 4 ROWS.
4. SEE SPECIFICATIONS FOR OTHER APPROVED MANUFACTURERS.
5. PROVIDE WITH CORROSION RESISTANT EPOXY ELECTRO FIN COATING OR EQUAL.
6. PROVIDE WITH INTEGRAL VFD FOR SUPPLY FAN.

VAV SCHEDULE

TAG						HEATING										
TYPE	#	AREA SERVED	INLET SIZE	MAX CFM	MIN CFM	EAT	LAT	HTG CFM	HTG BTU/HR	EWT	GPM	PIPE SIZE	ROWS	MAX NC	MANUF. & MODEL	SCHEDULE NOTES
VAV	1	STORAGE	8"	595 CFM	180 CFM	75 °F	105 °F	595 CFM	16000 Btu/h	180 °F	1.3 GPM	1/2"	2	25	PRICE SDV	1,2,3,4
VAV	2	WET LAB	8"	720 CFM	215 CFM	75 °F	105 °F	720 CFM	13100 Btu/h	180 °F	1.8 GPM	1/2"	2	25	PRICE SDV	1,2,3,4
VAV	3	B.O.D./MICRO LAB	12"	1,345 CFM	425 CFM	75 °F	105 °F	1,345 CFM	27300 Btu/h	180 °F	2.3 GPM	3/4"	2	25	PRICE SDV	1,2,3,4
VAV	4	MAIN LABORATORY	10"	970 CFM	290 CFM	75 °F	105 °F	970 CFM	19000 Btu/h	180 °F	2 GPM	3/4"	2	25	PRICE SDV	1,2,3,4
VAV	5	MAIN LABORATORY	10"	975 CFM	290 CFM	75 °F	105 °F	975 CFM	19000 Btu/h	180 °F	2 GPM	3/4"	2	25	PRICE SDV	1,2,3,4
VAV	6	METALS/NUTRIENTS LAB	8"	555 CFM	160 CFM	75 °F	105 °F	555 CFM	10700 Btu/h	180 °F	1.3 GPM	1/2"	2	25	PRICE SDV	1,2,3,4
VAV	7	METALS/NUTRIENTS LAB	12"	1,175 CFM	350 CFM	75 °F	105 °F	1,175 CFM	22500 Btu/h	180 °F	2 GPM	3/4"	2	25	PRICE SDV	1,2,3,4
VAV	8	VOLIAILES/ SEMI-VOLATILES LAB	6"	395 CFM	100 CFM	75 °F	105 °F	395 CFM	6600 Btu/h	180 °F	1 GPM	1/2"	2	25	PRICE SDV	1,2,3,4

1. SEE SPECIFICATIONS FOR OTHER APPROVED MANUFACTURERS.
2. SIZED AT 1.5" STATIC PRESSURE DROP ACROSS BOX.
3. SEE VAV PIPING AND VAV SEQUENCE DETAIL.
4. PROVIDE WITH 3 WAY VALVE.

FUME HOOD SCHEDULE

TAG				DIMENSIONS		
TYPE	#	AREA SERVED	CFM	LENGTH	MANUF & MODEL	SCHEDULE NOTES
FH	1	MAIN LABORATORY	920 CFM	72"	LABCONCO PROTECTOR XSTREAM	1,2,3,4,5
FH	2	MAIN LABORATORY	920 CFM	72"	LABCONCO PROTECTOR XSTREAM	1,2,3,4,5
FH	3	MAIN LABORATORY	920 CFM	72"	LABCONCO PROTECTOR XSTREAM	1,2,3,4,5
FH	4	MAIN LABORATORY	920 CFM	72"	LABCONCO PROTECTOR XSTREAM	1,2,3,4,5
FH	5	MAIN LABORATORY	920 CFM	72"	LABCONCO PROTECTOR XSTREAM	1,2,3,4,5
FH	6	SEMI-VOLATILES LABORATORY	920 CFM	72"	LABCONCO PROTECTOR XSTREAM	1,2,3,4,5
FH	7	VOLATILES LABORATORY	565 CFM	48"	LABCONCO PROTECTOR XSTREAM	1,2,3,4,5

1. PROVIDE WITH GAS FIXTURES
2. SEE SPECIFICATIONS FOR OTHER APPROVED MANUFACTURERS.
3. PROVIDE WITH GFCI ELECTRICAL OUTLET.
4. PROVIDE WITH VENTED BASE CABINETS.
5. PROVIDE WITH PHOENIX CONTROLS, SASH SENSOR AND ALARMS.

EXHAUST SNORKEL SCHEDULE

TAG								
TYPE	#	AREA SERVED	CFM	OPERATING WEIGHT	DIAMETER	LENGTH	MANUF & MODEL	SCHEDULE NOTES
SN	1	VOLATILES LABORATORY	150 CFM	17 lb	4"	5'	MAXAIR FA-HPG4-05	1,2,3
SN	2	SEMI-VOLATILES LABORATORY	150 CFM	17 lb	4"	5'	MAXAIR FA-HPG4-05	1,2,3

1. TIE SNORKEL INTO MAIN EXHAUST MANIFOLD.
2. PROVIDE WITH MANUAL VOLUME DAMPER AT USER LEVEL.
3. PROVIDE WITH 8" SNORKEL HOOD TO SERVE LABORATORY EQUIPMENT.

EXHAUST FAN SCHEDULE

TAG					ELECTRICAL					OPERATING WEIGHT	MANUF & MODEL	SCHEDULE NOTES
TYPE	#	AREA SERVED	CFM	ESP	VOLTAGE	PHASE	FREQUENCY	RPM	HP			
EF	1	MAIN LABORATORY	6,085 CFM	2.00 in-wg	460 V	3	60 Hz	1725	5 hp	1,134 lb	COOK TCNHBLE	1,2,3,4,5,6,7
EF	2	MAIN LABORATORY	6,085 CFM	2.00 in-wg	460 V	3	60 Hz	1725	5 hp	1,134 lb	COOK TCNHBLE	1,2,3,4,5,6,7
EF	3	BOTTLE STORAGE	75 CFM	0.35 in-wg	120 V	1	60 Hz	1725	0.5 hp	25 lb	GREENHECK CUE-060-VG	1,4,5

1. SEE SPEC FOR APPROVED MANUFACTURERS.
2. PROVIDE WITH ISOLATION DAMPERS AND RUN FANS IN LEAD/LAG, ALTERNATING RUN TIME SEQUENCE. SEE SPEC FOR LAB EXHAUST CONTROLS SEQUENCE.
3. PROVIDE WITH PHOENIX CONTROLS.
4. RUN CONTINUOUSLY.
5. PROVIDE WITH CORROSION RESISTANT COATING
6. PROVIDE WITH INTEGRAL SELF-SUPPORTED 10' DISCHARGE STACK.
7. COORDINATE WITH DIVISION 26 FOR VFD.

CONDENSING UNIT SCHEDULE

TAG		EQUIPMENT SERVED	COOLING (BTU/HR)	ELECTRICAL					SEER	OPERATING WEIGHT	MANUF & MODEL	SCHEDULE NOTES
TYPE	#			VOLTAGE	PHASE	FREQUENCY	MCA	MOCP				
CU	1	AHU-1	300,000 Btu/h	460 V	3	60 Hz	52 A	70 A	12.1	1,663 lb	TRANE RAUJC254B	1,2,3

1. PROVIDE DISCONNECT AT UNIT. COORDINATE WITH DIV 26.

DIFFUSER AND GRILLE SCHEDULE

TAG	MAX FLOW	FACE SIZE		NECK SIZE		CEILING TYPE	BLOW PATTERN	THROW @ 50 FPM	MAX NC	MANUF & MODEL	SCHEDULE NOTES
		LENGTH	WIDTH	LENGTH/ DIAMETER	WIDTH						
D-2	325 CFM	24"	24"	8"	0"	LAY-IN	4 WAY	10'	25	PRICE SPD	1,3,4
D-3	450 CFM	24"	24"	10"	0"	LAY-IN	4 WAY	11'	25	PRICE SPD	1,3,4
D-6	180 CFM	12"	12"	6"	0"	HARD	4 WAY	10'	25	PRICE SPD	1,3,4
R-1	600 CFM	24"	12"	24"	12"	LAY-IN	N/A	0'	25	PRICE 535	2,3,4
R-2	1,200 CFM	24"	24"	24"	24"	LAY-IN	N/A	0'	25	PRICE 535	2,3,4

1. SHALL BE PRICE SPD OR APPROVED EQUAL.
2. SHALL BE PRICE 535 OR APPROVED EQUAL.
3. SEE SPECIFICATIONS FOR OTHER APPROVED MANUFACTURERS.
4. FINISH SHALL BE SPECIFIED BY ARCHITECT.

PROFESSIONAL ENGINEER
10/25/18
WINWARD M. PACKER
No. 375080
STATE OF UTAH

BOWEN COLLINS & ASSOCIATES

WHW ENGINEERING INC.
PROFESSIONAL MECHANICAL ENGINEERING
8619 Sandy Parkway Suite 101
Sandy, Utah 84070
801-466-4021, fax 466-8536
Email: excellence@whw-engineering.com

REVISIONS

NO.	DATE	REV. BY	DESCRIPTION

VERIFY SCALE
BAR IS ONE INCH ON ORIGINAL DRAWING

South Valley Water Reclamation Facility
Lab Expansion and Remodel
7495 South 1300 West
West Jordan, Utah 84084

REVIEW
CHECKED
APPROVED
DESIGN
DESIGN
DRAWN

MECHANICAL SCHEDULES

PROJECT NUMBER 17906.00
DATE OCTOBER 31, 2018

DRAWING NO. H-02
SHEET 45 OF 79

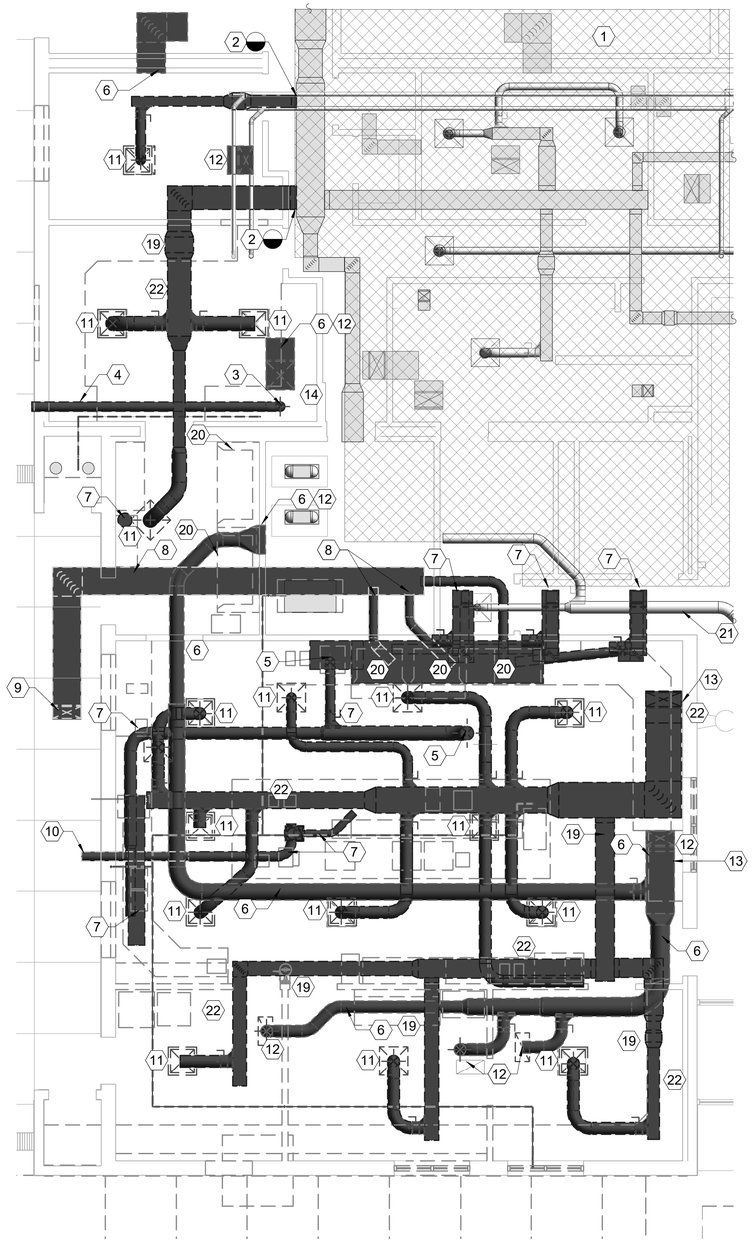

1 LEVEL ONE MECHANICAL DEMOLITION PLAN

SCALE: 3/16" = 1'-0"

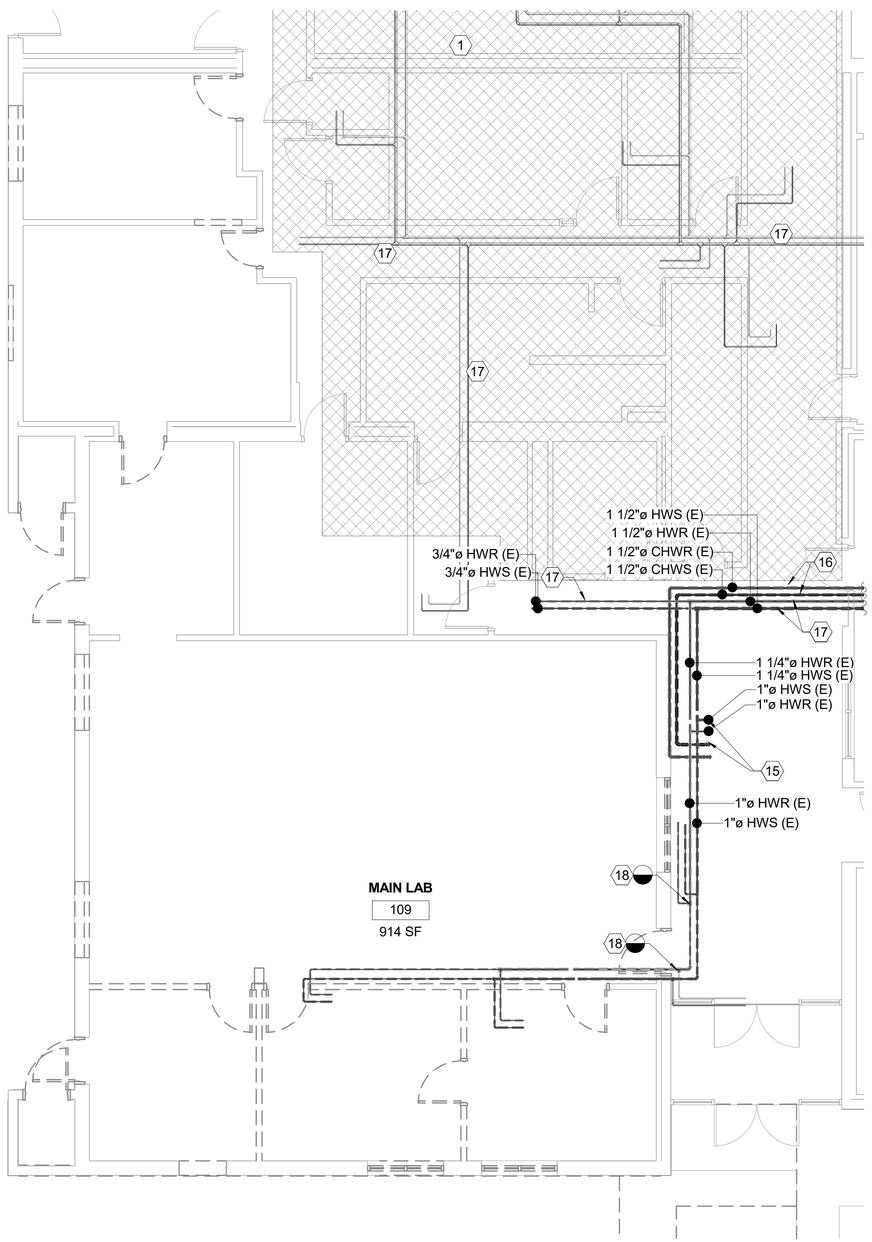

2 LEVEL ONE MECHANICAL PIPING DEMOLITION PLAN

SCALE: 3/16" = 1'-0"

SHEET NOTES

1. THIS AREA IS OUTSIDE THE SCOPE OF THIS PROJECT. ALL DUCTWORK, PIPING, VAV'S, HEATING COILS, ETC. SHALL REMAIN.
2. REMOVE EXISTING DUCTWORK AND ALL ASSOCIATED ITEMS BACK TO THIS APPROXIMATE LOCATION. PATCH AND REPAIR EXISTING DUCTWORK. FIELD VERIFY.
3. REMOVE EXISTING EXHAUST SNORKEL AND ALL ASSOCIATED ITEMS IN THIS APPROXIMATE LOCATION.
4. REMOVE EXISTING EXHAUST FAN SERVING SNORKELS AND ALL ASSOCIATED ITEMS IN THIS APPROXIMATE LOCATION. PATCH AND REPAIR EXISTING PENETRATION THROUGH EXTERIOR WALL WATER TIGHT. COORDINATE WITH ARCHITECT FOR MATERIALS TO MATCH.
5. REMOVE EXHAUST DUCTWORK THROUGH ROOF IN THIS APPROXIMATE LOCATION. FIELD VERIFY. PATCH AND REPAIR ROOF WEATHER TIGHT WHERE PENETRATIONS ARE NOT RE-USED. COORDINATE WITH ROOFING CONTRACTOR.
6. REMOVE EXISTING RETURN DUCTWORK AND ALL ASSOCIATED ITEMS IN THIS APPROXIMATE LOCATION. FIELD VERIFY.
7. REMOVE EXISTING EXHAUST DUCTWORK IN THIS APPROXIMATE LOCATION AND ALL ASSOCIATED ITEMS. FIELD VERIFY
8. REMOVE EXISTING OUTSIDE AIR DUCTWORK AND ALL ASSOCIATED ITEM IN THIS APPROXIMATE LOCATION. FIELD VERIFY.
9. REMOVE EXISTING OUTSIDE AIR GRILLE IN SOFFIT IN THIS APPROXIMATE LOCATION. PATCH AND REPAIR. COORDINATE WITH ARCHITECT.
10. REMOVE EXISTING EXHAUST GRILLE IN SOFFIT IN THIS APPROXIMATE LOCATION. PATCH AND REPAIR TO MATCH. COORDINATE WITH ARCHITECT.
11. REMOVE EXISTING SUPPLY AIR DIFFUSER AND ALL ASSOCIATED ITEMS IN THIS APPROXIMATE LOCATION. FIELD VERIFY.
12. REMOVE EXISTING RETURN AIR GRILLE AND ALL ASSOCIATED ITEMS IN THIS APPROXIMATE LOCATION. FIELD VERIFY.
13. REMOVE EXISTING DUCTWORK RISER TO ROOFTOP UNIT AND ALL ASSOCIATED ITEMS IN THIS APPROXIMATE LOCATION. COORDINATE PENETRATIONS WITH NEW AIR HANDLER. PATCH AND REPAIR UN-USED PENETRATIONS WEATHER TIGHT.
14. REMOVE EXISTING THERMOSTAT AND ALL ASSOCIATED ITEMS IN THIS APPROXIMATE LOCATION. FIELD VERIFY.
15. REMOVE EXISTING HYDRONIC PIPING RISERS SERVING ROOFTOP UNIT.
16. REMOVE EXISTING HYDRONIC PIPING IN THIS APPROXIMATE LOCATION. SEE H-06 FOR CONTINUATION.
17. EXISTING HWS AND HWR PIPING IN THIS APPROXIMATE LOCATION SHALL REMAIN.
18. REMOVE EXISTING HWS AND HWR SERVING VAV REHEAT COIL IN THIS APPROXIMATE LOCATION.
19. REMOVE EXISTING VAV BOX AND ALL ASSOCIATED ITEMS IN THIS APPROXIMATE LOCATION.
20. REMOVE EXISTING LABORATORY FUME HOOD AND ALL ASSOCIATED ITEMS IN THIS APPROXIMATE LOCATION. FIELD VERIFY.
21. EXISTING DUCTWORK OUTSIDE OF LAB SHALL REMAIN.
22. REMOVE EXISTING SUPPLY DUCTWORK AND ALL ASSOCIATED ITEMS IN THIS APPROXIMATE LOCATION. FIELD VERIFY.

BOWEN COLLINS & ASSOCIATES

WHW ENGINEERING INC.
PROFESSIONAL MECHANICAL ENGINEERING
8619 Sandy Parkway Suite 101
Sandy, Utah 84070
801-466-4021 fax 466-8536
Email: excellence@whw-engineering.com

NO.	DATE	REV. BY	DESCRIPTION
			REVISIONS

VERIFY SCALE
BAR IS ONE INCH
ORIGINAL DRAWING

South Valley Water Reclamation Facility
Lab Expansion and Remodel
7495 South 1300 West
West Jordan, Utah 84084

DESIGN: REVIEW
DESIGN: CHECKED
DRAWN: APPROVED

MECHANICAL DEMOLITION PLAN

PROJECT NUMBER: 17906.00
DATE: OCTOBER 31, 2018

PROFESSIONAL ENGINEER
10/25/18
WINWARD M. PACKER
No. 375080
STATE OF UTAH

DRAWING NO. H-03

SHEET 46 OF 79

10/31/2018 9:33:25 AM

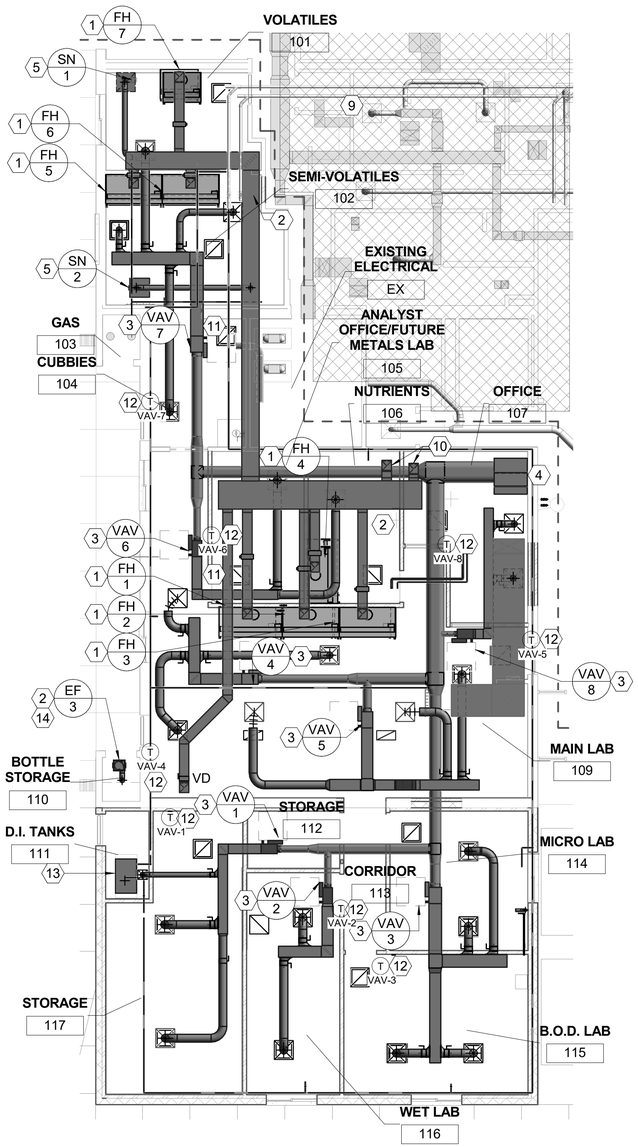

LEVEL 1 MECHANICAL FLOOR PLAN

1 SCALE: 1/8" = 1'-0"

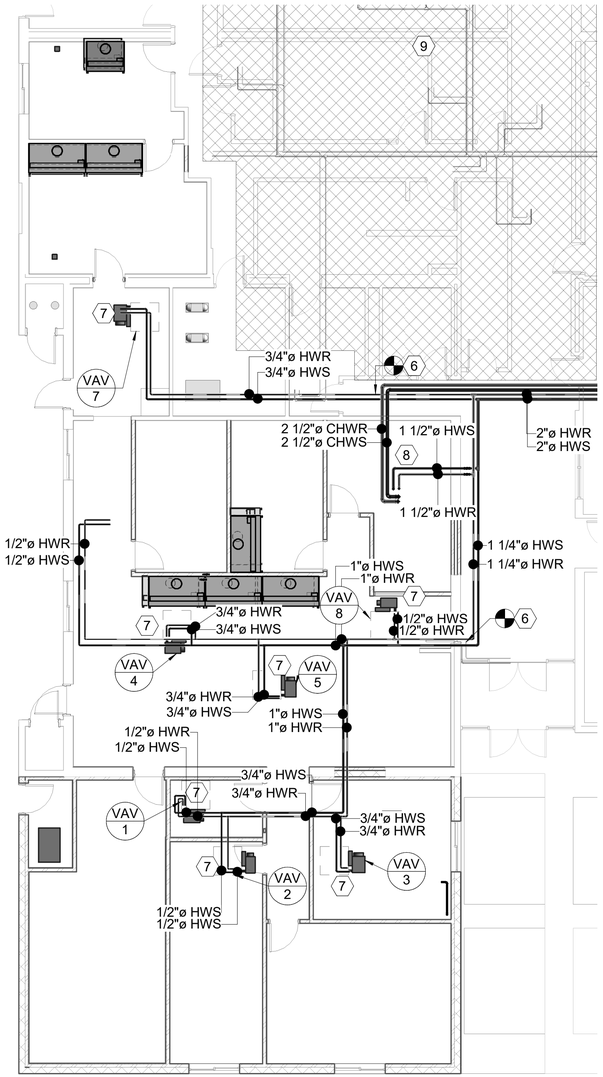

LEVEL 1 MECHANICAL PIPING PLAN

2 SCALE: 1/8" = 1'-0"

SHEET NOTES

1. PROVIDE NEW LAB HOOD IN THIS APPROXIMATE LOCATION. FIELD VERIFY. SEE MECHANICAL SCHEDULES. PROVIDE WHITE METAL SKIRT FROM TOP OF LAB HOOD TO CEILING. FIELD VERIFY DIMENSIONS. PROVIDE WITH LAB HOOD FLOW CONTROLS, INCLUDING PHOENIX VALVE, SASH SENSOR, MONITOR AND ALARMS.
2. PROVIDE NEW EXHAUST DUCTWORK IN THIS APPROXIMATE LOCATION. FIELD VERIFY.
3. PROVIDE NEW VAV BOX WITH HEATING COIL IN THIS APPROXIMATE LOCATION. FIELD VERIFY. SEE MECHANICAL SCHEDULE.
4. PROVIDE NEW SUPPLY AIR DUCT DROP IN THIS APPROXIMATE LOCATION. FIELD VERIFY.
5. PROVIDE NEW EXHAUST SNORKEL IN THIS APPROXIMATE LOCATION. FIELD VERIFY. SEE MECHANICAL SCHEDULE.
6. TIE NEW PIPING INTO EXISTING HWS AND HWR IN THIS APPROXIMATE LOCATION. FIELD VERIFY.
7. PROVIDE NEW HWS AND HWR PIPING IN TO VAV COIL IN THIS APPROXIMATE LOCATION. SEE MECHANICAL DETAILS.
8. PROVIDE NEW HYDRONIC PIPING RISER TO ROOF IN THIS APPROXIMATE LOCATION. FIELD VERIFY. SEE PIPING DIAGRAM ON MECHANICAL DETAILS.
9. AREA OUTSIDE SCOPE OF WORK.
10. PROVIDE NEW EXHAUST DUCT RISER TO ROOF IN THIS APPROXIMATE LOCATION. FIELD VERIFY.
11. PROVIDE NEW NEGATIVE PRESSURE INDICATION DISPLAY IN THIS APPROXIMATE LOCATION. ORGANICS LABS SHALL OPERATE AT -0.01" W.C. DISPLAY SHALL SHOW GREEN FOR ACCEPTABLE PRESSURE DIFFERENTIAL AND RED FOR NON-SATISFACTORY CONDITIONS.
12. PROVIDE NEW THERMOSTAT IN THIS APPROXIMATE LOCATION. MOUNT 48" AFF.
13. RELOCATE DE-IONIZED WATER GENERATOR TO THIS APPROXIMATE LOCATION.
14. PROVIDE NEW EXHAUST FAN IN THIS APPROXIMATE LOCATION. FIELD VERIFY.

GENERAL NOTES:

1. CONTRACTOR SHALL COORDINATE ALL NECESSARY ELECTRICAL ACCOMODATIONS WITH DIVISION 26, INCLUDING BUT NOT LIMITED TO: ANY NEW WIRING, CIRCUIT BREAKERS, CONDUIT, OR CALCULATIONS. CONTRACTOR SHALL COORDINATE EXISTING ELECTRICAL CONDITIONS PRIOR TO ORDERING ANY NEW MECHANICAL EQUIPMENT OR REMOVAL OF MECHANICAL EQUIPMENT.
2. PROVIDE BALANCING DAMPERS ON ALL SUPPLY AND EXHAUST BRANCHES.
3. PROVIDE FULL TEST AND BALANCE OF ALL IMPACTED SYSTEMS BY A LICENSED AND APPROVED TEST AND BALANCE CONTRACTOR.
4. SEE SHEET H-04.1 FOR GRILLES, REGISTERS, DIFFUSER AND DUCTWORK SIZING.

BOWEN COLLINS & ASSOCIATES

WHW ENGINEERING INC.
PROFESSIONAL MECHANICAL ENGINEERING
8619 Sandy Parkway Suite 101
Sandy, Utah 84070
801-466-4021, fax 466-8536
Email: excellence@whw-engineering.com

NO.	DATE	REV. BY	DESCRIPTION

REVISIONS

VERIFY SCALE
BAR IS ONE INCH
ORIGINAL DRAWING

South Valley Water Reclamation Facility
Lab Expansion and Remodel
7495 South 1300 West
West Jordan, Utah 84084

DESIGN | REVIEW | CHECKED | APPROVED | DESIGN | DRAWN

MECHANICAL EQUIPMENT AND PIPING PLAN

DATE: OCTOBER 31, 2018
PROJECT NUMBER: 17906.00

PROFESSIONAL ENGINEER
10/25/18
WINWARD M. PACKER
No. 375080
STATE OF UTAH

DRAWING NO.
H-04

SHEET 47 OF 79

10/31/2018 9:33:37 AM

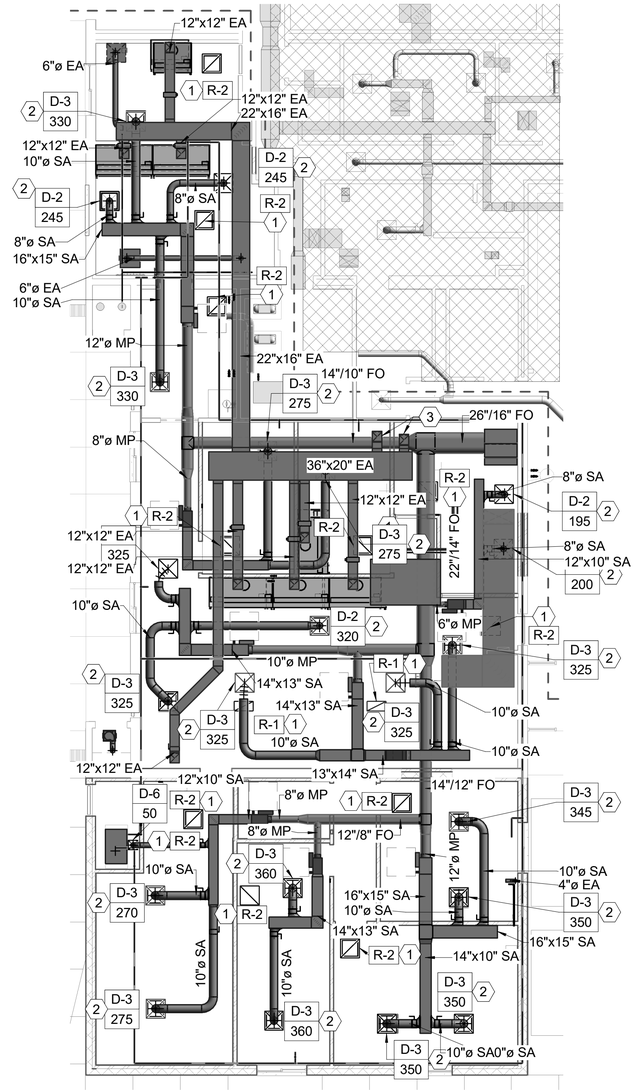

LEVEL 1 MECHANICAL GRD FLOOR PLAN

1 SCALE: 1/8" = 1'-0"

SHEET NOTES

1. PROVIDE NEW RETURN GRILLE IN THIS APPROXIMATE LOCATION. FIELD VERIFY.
2. PROVIDE NEW SUPPLY DIFFUSER IN THIS APPROXIMATE LOCATION. FIELD VERIFY. BALANCE TO CFM SHOWN.
3. PROVIDE NEW EXHAUST DUCT RISER TO ROOF IN THIS APPROXIMATE LOCATION. FIELD VERIFY.

GENERAL NOTES:

1. CONTRACTOR SHALL COORDINATE ALL NECESSARY ELECTRICAL ACCOMODATIONS WITH DIVISTION 26, INCLUDING BUT NOT LIMITED TO: ANY NEW WIRING, CIRCUIT BREAKERS, CONDUIT, OR CALCULATIONS. CONTRACTOR SHALL COORDINATE EXISTING ELECTRICAL CONDITIONS PRIOR TO ORDERING ANY NEW MECHANICAL EQUIPMENT OR REMOVAL OF MECHANICAL EQUIPMENT.
2. PROVIDE BALANCING DAMPERS ON ALL SUPPLY AND EXHAUST BRANCHES.
3. PROVIDE FULL TEST AND BALANCE OF ALL IMPACTED SYSTEMS BY A LICENSED AND APPROVED TEST AND BALANCE CONTRACTOR.
4. SEE SHEET H-04 FOR MECHANICAL EQUIPMENT AND PIPING PLAN.

BOWEN COLLINS & ASSOCIATES

WHW ENGINEERING INC.
PROFESSIONAL MECHANICAL ENGINEERING
8619 Sandy Parkway Suite 101
Sandy, Utah 84070
801-466-4021, fax 466-8536
Email: excellence@whw-engineering.com

NO.	DATE	REV. BY	DESCRIPTION
			REVISIONS

South Valley Water Reclamation Facility
Lab Expansion and Remodel
7495 South 1300 West
West Jordan, Utah 84084

VERIFY SCALE
BAR IS ONE INCH
ORIGINAL DRAWING

DESIGN REVIEW CHECKED APPROVED
DESIGN DRAWN

MECHANICAL GRD PLAN

DATE OCTOBER 31, 2018
PROJECT NUMBER 17906.00

DRAWING NO. H-04.1
SHEET 48 OF 79

PROFESSIONAL ENGINEER
10/25/18
WINWARD M. PACKER
No. 375080
STATE OF UTAH

10/31/2018 9:33:43 AM

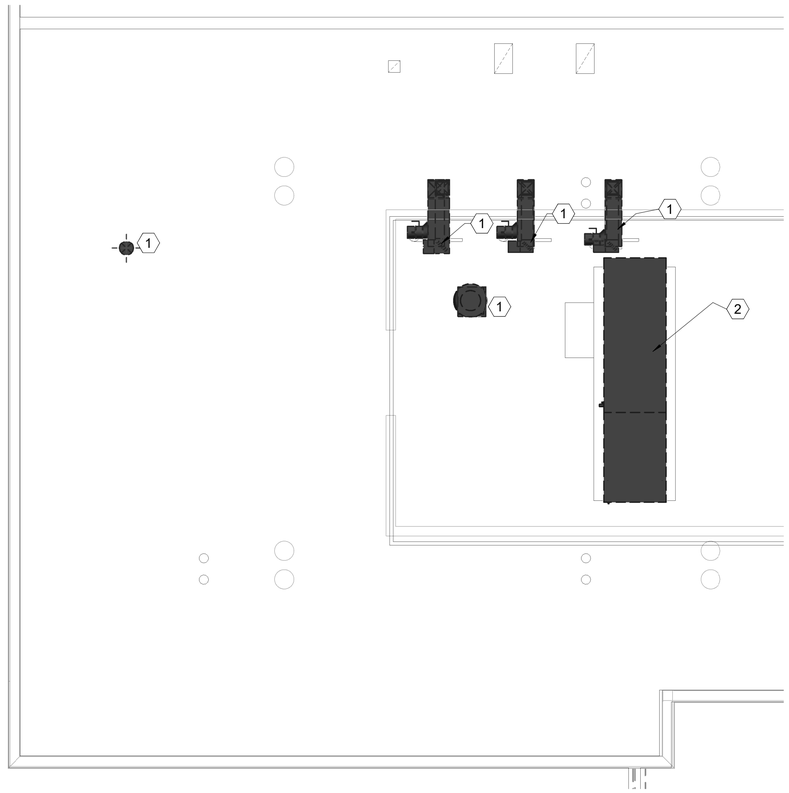

1 ROOF LEVEL MECHANICAL DEMOLITION PLAN

SCALE: 3/16" = 1'-0"

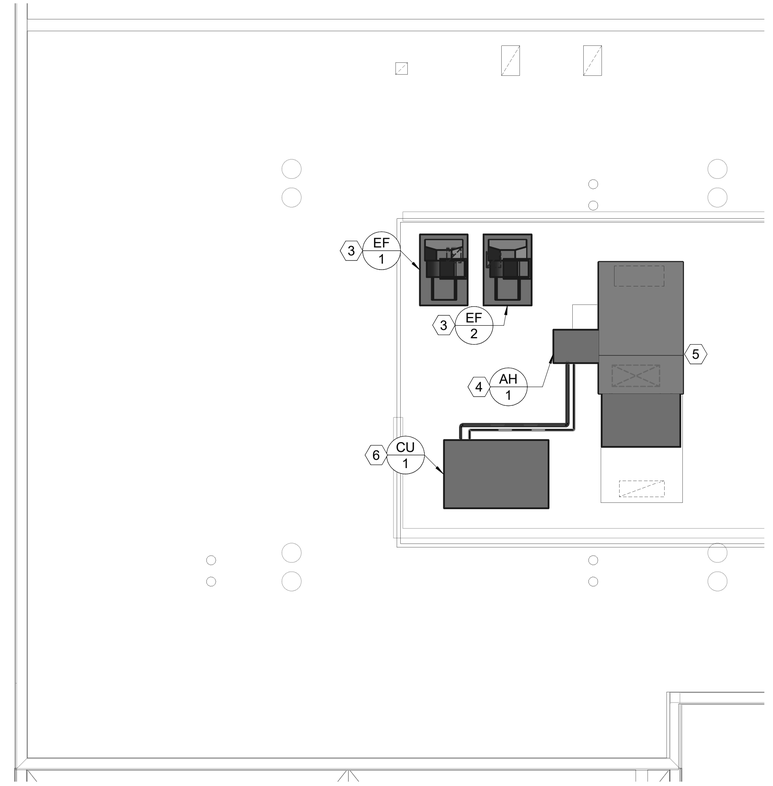

2 ROOF MECHANICAL PLAN

SCALE: 3/16" = 1'-0"

SHEET NOTES

1. REMOVE EXISTING EXHAUST FAN AND ALL ASSOCIATED ITEMS IN THIS APPROXIMATE LOCATION. FIELD VERIFY. COORDINATE WITH ROOFING CONTRACTOR TO SEAL PENETRATIONS WEATHER TIGHT. PATCH SCREEN WALL TO MATCH. COORDINATE WITH ARCHITECT.
2. REMOVE EXISTING AIR HANDLER ON ROOF IN THIS APPROXIMATE LOCATION. REMOVE AND REPLACE SCREEN WALL AS NEEDED FOR INSTALL. DISCONNECT WATER COIL FEEDS AND ALL OTHER NECESSARY ITEMS. FIELD VERIFY.
3. PROVIDE NEW EXHAUST FANS ON ROOF TO SERVE FUME HOODS IN THIS APPROXIMATE LOCATION. FIELD VERIFY. SEE MECHANICAL SCHEDULE. COORDINATE WITH ELECTRICAL FOR VFD.
4. PROVIDE NEW AHU ON ROOF IN THIS APPROXIMATE LOCATION. PROVIDE CURBING, PIPING, ELECTRICAL AND ALL OTHER NECESSARY ITEMS FOR INSTALLATION. COORDINATE WITH ELECTRICAL FOR VFD CONTROL.
5. PROVIDE NEW SUPPLY AND RETURN DUCTWORK DROPS TO LABORATORY BELOW. SEE SHEET H-04 FOR CONTINUATION OF DUCTWORK ON LEVEL BELOW.
6. PROVIDE NEW CONDENSING UNIT TO SERVE AHU IN THIS APPROXIMATE LOCATION. SEE MECHANICAL SCHEDULE. FIELD VERIFY. PROVIDE REFRIGERANT PIPING FROM NEW CONDENSING UNIT TO NEW AHU. PIPE PER MANUFACTURER'S RECOMMENDATIONS.

GENERAL NOTES:

1. CONTRACTOR SHALL COORDINATE ALL NECESSARY ELECTRICAL ACCOMODATIONS WITH DIVISTION 26, INCLUDING BUT NOT LIMITED TO: ANY NEW WIRING, CIRCUIT BREAKERS, CONDUIT, OR CALCULATIONS. CONTRACTOR SHALL COORDINATE EXISTING ELECTRICAL CONDITIONS PRIOR TO ORDERING ANY NEW MECHANICAL EQUIPMENT OR REMOVAL OF MECHANICAL EQUIPMENT.
2. PROVIDE BALANCING DAMPERS ON ALL SUPPLY AND EXHAUST BRANCHES.
3. PROVIDE FULL TEST AND BALANCE OF ALL IMPACTED SYSTEMS BY A LICENSED AND APPROVED TEST AND BALANCE CONTRACTOR.

BOWEN COLLINS & ASSOCIATES

WHW ENGINEERING INC.
PROFESSIONAL MECHANICAL ENGINEERING
8619 Sandy Parkway Suite 101
Sandy, Utah 84070
801-466-4021 fax 466-8536
Email: excellence@whw-engineering.com

REVISIONS

NO.	DATE	REV. BY	DESCRIPTION

South Valley Water Reclamation Facility
Lab Expansion and Remodel
7495 South 1300 West
West Jordan, Utah 84084

VERIFY SCALE
BAR IS ONE INCH
ORIGINAL DRAWING

REVIEW
CHECKED
APPROVED

DESIGN
DESIGN
DRAWN

MECHANICAL ROOF PLAN

PROJECT NUMBER 17906.00
DATE OCTOBER 31, 2018

PROFESSIONAL ENGINEER
10/25/18
WINWARD M. PACKER
No. 375080
STATE OF UTAH

DRAWING NO. H-05
SHEET 49 OF 79

10/31/2018 9:33:47 AM